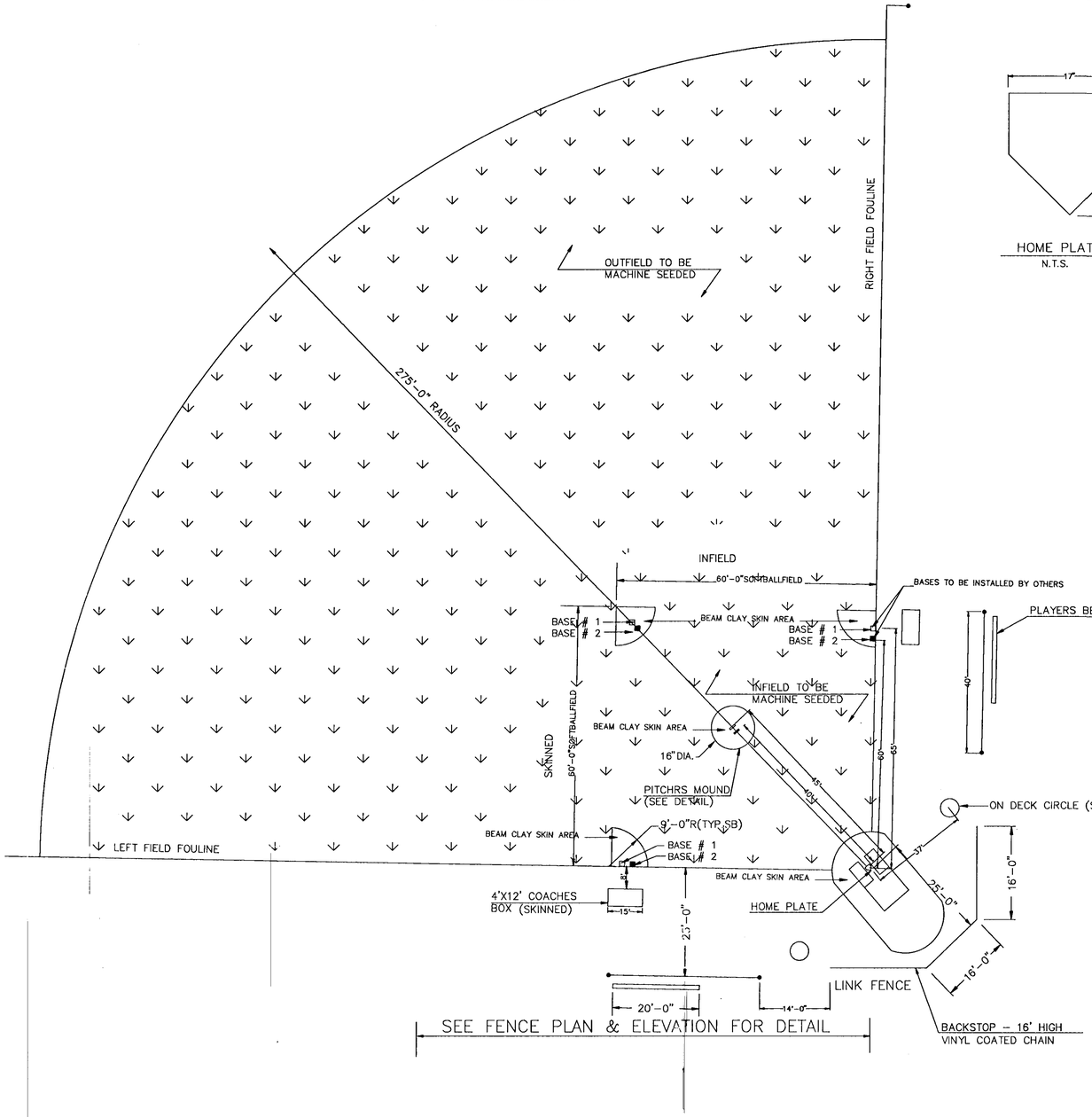

STANDARD UNIVERSAL BALLFIELDS

N.T.S

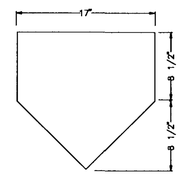

HOME PLATE

N.T.S.

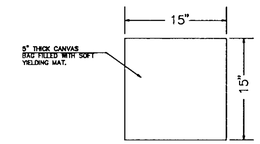

TYPICAL BASE DIMENSIONS

N.T.S.

INSTALLED BY OTHERS

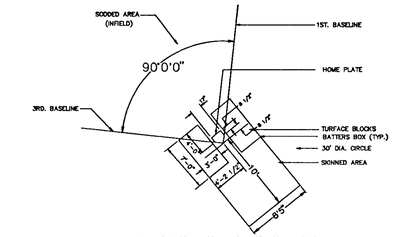

LAYOUT AT HOME PLATE

N.T.S

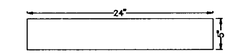

PITCHER'S PLATE

N.T.S.

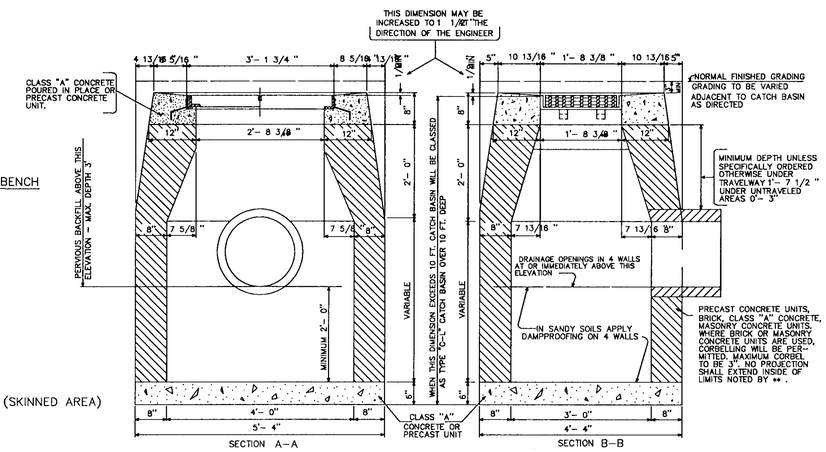

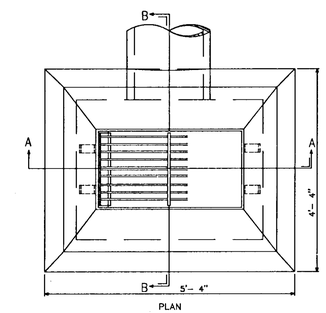

TYPE "C-L" CATCH BASIN

TYPE "C-L" CATCH BASIN

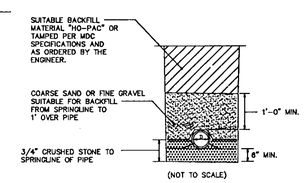

NOTE:

CRUSHED STONE FOUNDATION 3/4 INCH MAXIMUM SIZE, SHALL BE PLACED 6-INCHES UNDER THE PIPE AND UP TO THE PIPE GRADE, THE PIPE LAID THEREON, CRUSHED STONE PULLED AGAINST THE PIPE SIDES TO FIRMLY HOLD THE PIPE IN PLACE.

ALL COSTS FOR THIS CRUSHED STONE FOUNDATION SHALL BE INCLUDED IN THE PRICE FOR ALL PIPE.

CRUSHED STONE HAUNCHING, 3/4-INCH MAXIMUM SIZE, SHALL BE BROUGHT TO A LEVEL TO THE TOP OF THE PIPE AND OUT TO THE TRENCH WALL AT THIS ELEVATION FOR ALL PIPE TO AND INCLUDING 10-INCH SIZE AND FOR ALL PLASTIC PIPE.

TYPICAL TRENCH CROSS SECTION FOR SOLID PIPE SHOWING CRUSHED STONE FOUNDATION AND HAUNCHING, AND BACKFILL

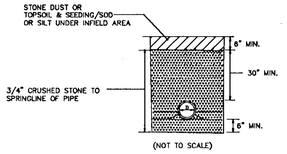

NOTE:

CRUSHED STONE FOUNDATION 3/4 INCH MAXIMUM SIZE, SHALL BE PLACED 6-INCHES UNDER THE PIPE AND UP TO THE PIPE GRADE, THE PIPE LAID THEREON, CRUSHED STONE PULLED AGAINST THE PIPE SIDES TO FIRMLY HOLD THE PIPE IN PLACE.

ALL COSTS FOR THIS CRUSHED STONE FOUNDATION SHALL BE INCLUDED IN THE PRICE FOR ALL PIPE.

CRUSHED STONE HAUNCHING, 3/4-INCH MAXIMUM SIZE, SHALL BE BROUGHT TO A LEVEL TO THE TOP OF THE PIPE AND OUT TO THE TRENCH WALL AT THIS ELEVATION FOR ALL PIPE TO AND INCLUDING 10-INCH SIZE AND FOR ALL PLASTIC PIPE.

TYPICAL TRENCH CROSS SECTION FOR SLOTTED PIPE SHOWING CRUSHED STONE FOUNDATION AND HAUNCHING, AND BACKFILL

DAYBOOK NO. 011396

CITY OF HARTFORD, CONNECTICUT
DEPARTMENT OF PUBLIC WORKS
TRANSPORTATION SERVICES BUREAU

STANDARD LAYOUT AND DETAILS FOR UNIVERSAL BALLFIELDS AND DRAINAGE STRUCTURES

SUBMITTED	RECOMMENDED	APPROVED
PROJECT ENGINEER	MANAGER	CITY ENGINEER

DRAWN MK	SCALE: NOT TO SCALE	DAYBOOK NO. ~~011280~~	SHEET 5
CHECKED MK		DATE MAY 1996	OF 5
		FILE NAME 96-06DTZ.DWG	

96-06DTZ.PLC

633/2/E