630/20

FHWA REGION NO.	STATE	TOWN	FED. AID PROJ. NO.	PROJ. NO.	YEAR	ROUTE NO.	SHEET NO.	TOTAL SHEETS
1	CONN	HARTFORD	TEA-PEDS(40)	63-529	1999	–	20	58

630/20

MAXIMUM BEARING LOADS

LOCATION	GIRDER NUMBER	D.L. (kN)	L.L. (kN)	TOTAL (kN)	HORIZ. FORCE LONG. (kN)	HORIZ. FORCE TRANS. (kN)	MOVEMENT LONG. (mm)	MOVEMENT TRANS. (mm)	BEARING TYPE
NEW WEST PIER	G-1	488	119	607	40	_	25	1	FREE
	G-2	462	209	671	40	_	25	0	GUIDED
	G-3	462	209	671	40	_	25	1	FREE
	G-4	488	119	607	40	_	25	3	FREE
EXISTING EAST PIER	G-1	488	119	607	40	_	0	0	FIXED
	G-2	462	209	671	40	_	0	0	FIXED
	G-3	462	209	671	40	_	0	0	FIXED
	G-4	488	119	607	40	_	0	0	FIXED
EXISTING EAST PIER	S1	414	71	485	22	22	62	3	FREE
	S2	414	71	485	22	271	62	0	GUIDED
	S3	311	53	364	18	18	62	2	FREE
	S5	276	53	329	18	18	65	3	FREE

Shown for Informational Purposes Only. See Sheet 10B of 28B for location.

TEMPERATURE SETTING TABLE

TEMPERATURE (F°)	30	40	50	60	70	80	90
TEMPERATURE (C°)	−1.1	4.4	10	15.6	21.1	26.7	32.2
"a" (mm)	54	49	44	39	33	28	23

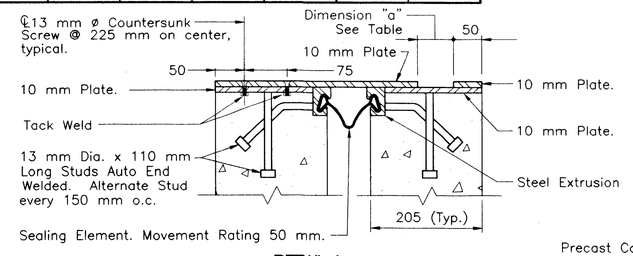

DETAIL A
SCALE 1:5

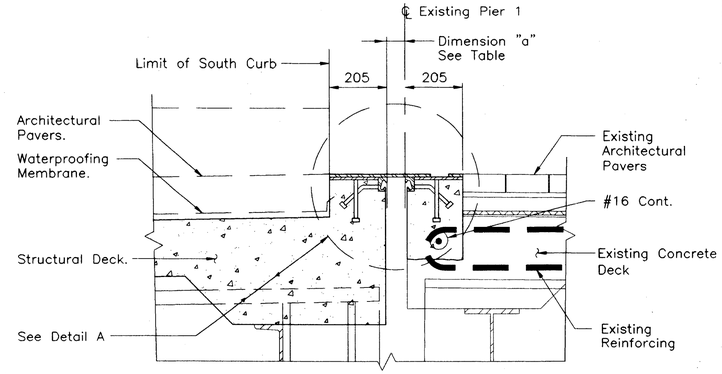

FIXED JOINT - EAST
SCALE 1:10

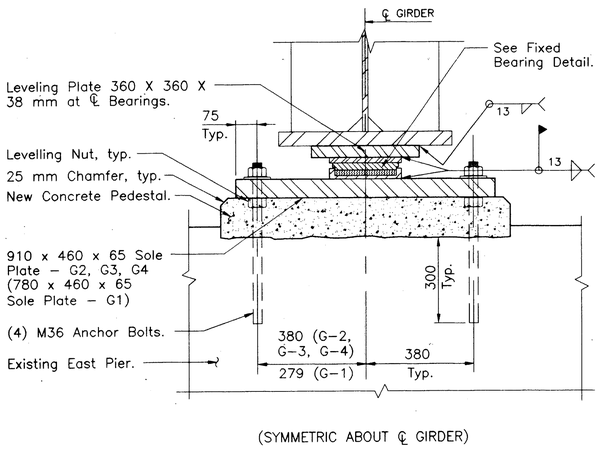

FIXED BEARING - EAST PIER
SCALE 1:10

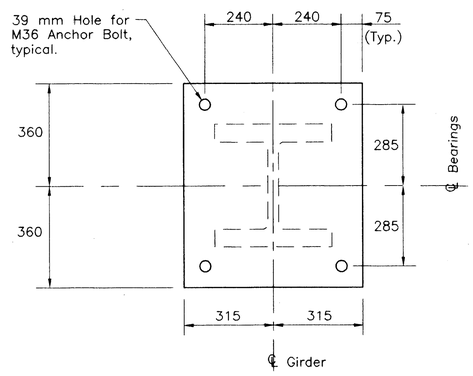

BEARING PLATE PLAN
SCALE 1:10

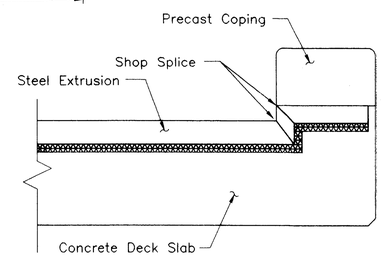

TREATMENT AT NORTH CURB
SCALE 1:10

EXPANSION JOINT NOTES:

1. All work for installation of the new Expansion Joint System shall be performed and paid for in accordance with the Special Provision "Elastomeric Concrete Expansion Joint System."
2. The Contractor shall select an Expansion Joint System which is on the Department's current "Approved Products List", as further described in the Special Provisions.

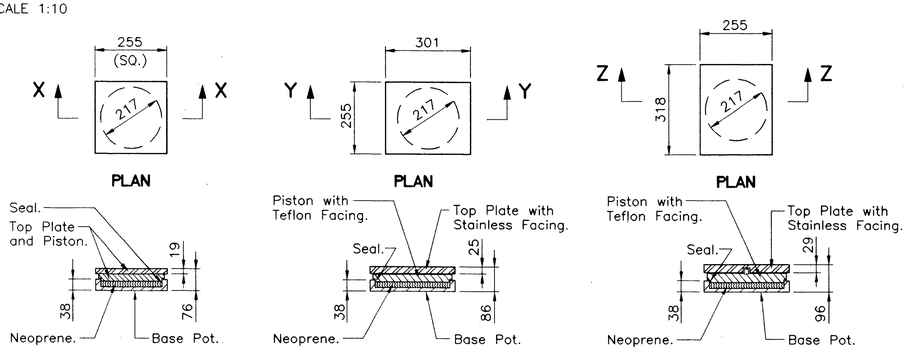

FIXED BEARING
SCALE 1:10

FREE MOVING BEARING
SCALE 1:10

GUIDED BEARING
SCALE 1:10

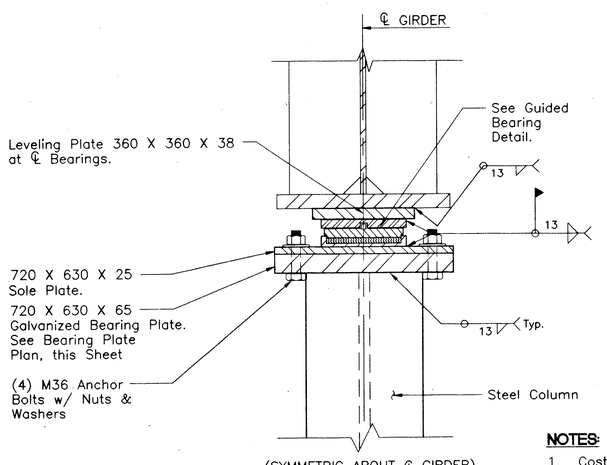

GUIDED BEARING - WEST PIER
SCALE 1:10

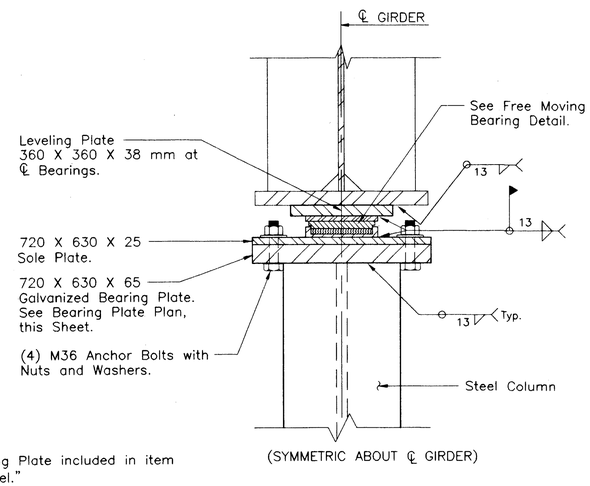

FREE MOVING BEARING - WEST PIER
SCALE 1:10

NOTES:

1. Cost of Bearing Plate included in item "Structural Steel."
2. All Bearings, Leveling Plates, Sole Plates, Anchor Bolts, Nuts and Washers to be metalized unless otherwise noted.

NOTES:

1. All dimensions shown are in millimeters unless otherwise noted.
2. All elevations are in meters.
3. For New Concrete Pedestal Details See Structure Sheet No. 4B of 28B.

NO.	DATE	DESCRIPTION

REVISIONS

CITY OF HARTFORD

PEDESTRIAN BRIDGE
OVER
COLUMBUS BOULEVARD

EXPANSION JOINT AND BEARING DETAILS

ENGINEER: MACCHI ENGINEERS, LLC
DESIGNER: DC | DRAFTER: DC | CHECKER: JB
APPROVED James Brickman | DATE: 9-17-99
STRUCTURE NO. | BRIDGE LOG NO. | STRUCTURE SHEET NO. 15B of 28B

630/20