FHWA REGION NO.	STATE	TOWN	FED. AID PROJ. NO.	PROJ. NO.	YEAR	ROUTE NO.	SHEET NO.	TOTAL SHEETS
1	CONN	HARTFORD	TEA-PEDS(40)	63-529	1999	–	16	58

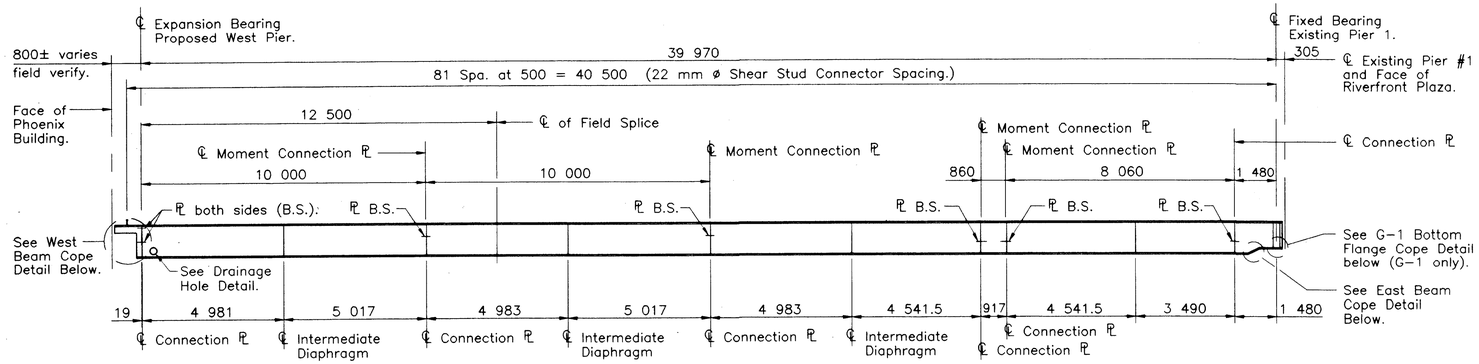

ELEVATION OF PLATE GIRDERS G-1 AND G-4:

SCALE 1:100

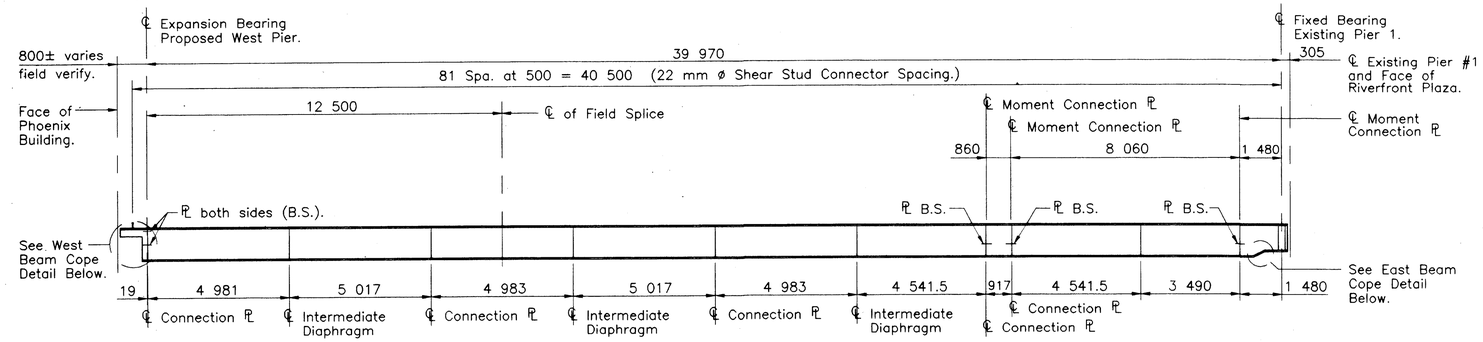

ELEVATION OF PLATE GIRDERS G-2 AND G-3:

SCALE 1:100

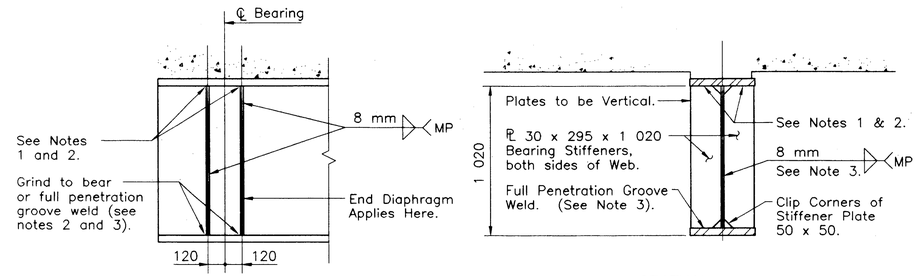

ELEVATION

(Applies at East end Support Location)

SECTION

BEARING STIFFENER DETAILS

SCALE 1:20

BEARING STIFFENER NOTES:

1. At Top Flanges, Bearing Stiffeners shall be Welded in the Positive Moment Areas.
2. Bearing Stiffeners which Connect Diaphragms shall be Attached to Top and Bottom Flanges by Full Penetration Groove Welds.
3. End Stiffener Welds±6 3 mm from Clipped Corners. See 50 mm x 50 mm Clip Detail located on this Sheet.

NOTES:

1. All dimensions shown are in millimeters unless otherwise noted.
2. All elevations are in meters.
3. For Bolted Field Splice details and Structural Steel notes, see Structure Sheet 10B of 28B.

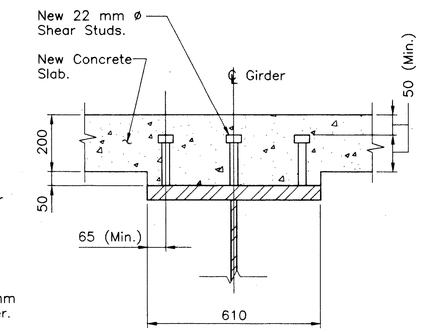

Shear Connector Notes:

1. Maximum Length of Stud = 200 mm, in Increments of 25 mm.
2. Stacked shear connectors shall be used at the locations where the haunch exceed 150 mm.
3. Estimated No. of studs = 1 015.

SHEAR CONNECTOR DETAIL

SCALE 1:10

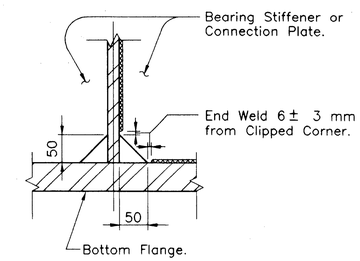

50 mm x 50 mm CLIP DETAIL

SCALE 1:5

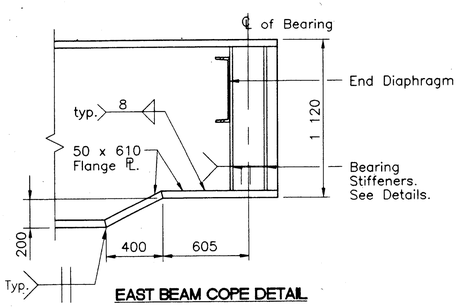

EAST BEAM COPE DETAIL

SCALE 1:20

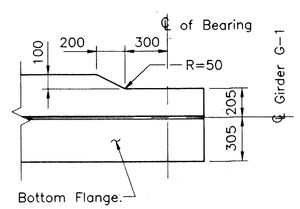

G-1 BOTTOM FLANGE COPE DETAIL

SCALE 1:20

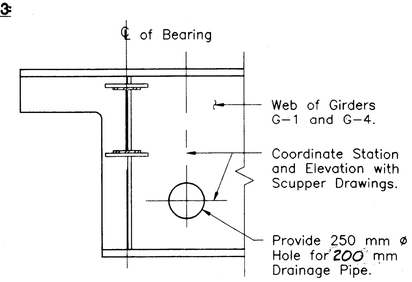

DRAINAGE HOLE DETAIL

SCALE 1:20

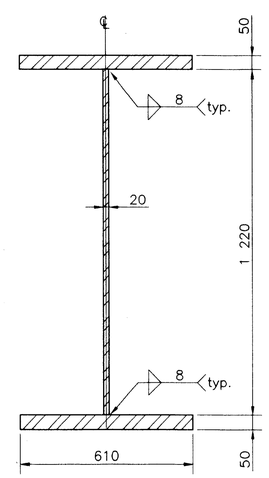

CROSS SECTION OF PLATE GIRDER:

SCALE 1:10

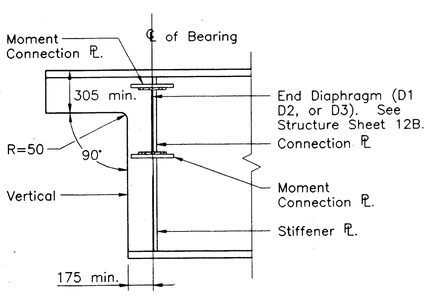

WEST BEAM COPE DETAIL

SCALE 1:20

DEAD LOAD DEFLECTIONS AND CAMBERS AT MIDSPAN

(VALUES IN METERS)

GIRDER NO.	STRUCTURAL STEEL DEFLECTIONS	ADDITIONAL DEAD LOAD DEFLECTIONS	COMPOSITE DEAD LOAD DEFLECTIONS	TOTAL DEAD LOAD CAMBER	VERTICAL CURVE ORDINATE CAMBER	EXTRA CAMBER	TOTAL CAMBER
G-1 G-4	−0.038	−0.075	−0.047	+0.160	0.0	0.0	+0.160
G-2 G-3	−0.038	−0.058	−0.077	+0.173	0.0	0.0	+0.173

(−) INDICATES DOWNWARD DEFLECTION.

(+) INDICATES UPWARD CAMBER.

NO.	DATE	DESCRIPTION

REVISIONS

CITY OF HARTFORD

PEDESTRIAN BRIDGE

OVER

COLUMBUS BOULEVARD

GIRDER DETAILS

ENGINEER: MACCHI ENGINEERS, LLC

DESIGNER: DC | DRAFTER: MPJ/DC | CHECKER: JB

APPROVED James Brockman DATE 9-17-99

STRUCTURE NO. | BRIDGE LOG NO. | STRUCTURE SHEET NO. 11B of 28B