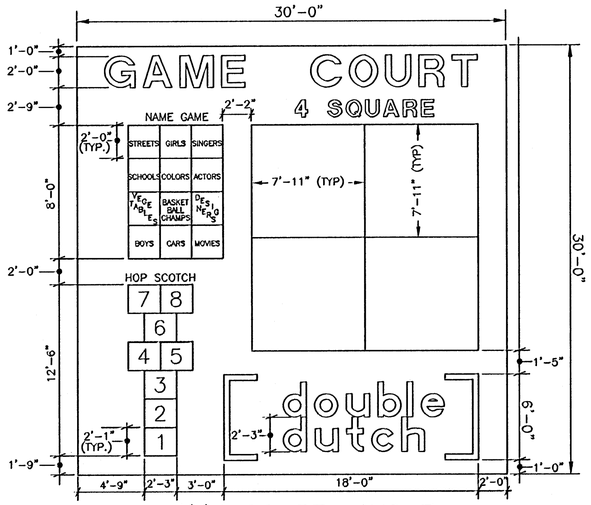

GAME COURT LAYOUT

N.T.S.

* GAME COURT LETTERING TO BE DONE WITH STENCILS TO THE DIMENSIONS SHOWN. ALL PAINTED LINES ARE TO BE WHITE IN COLOR AND TO BE 2" WIDE. DIMS. SHOWN ARE TO INSIDE EDGE OF LINE.

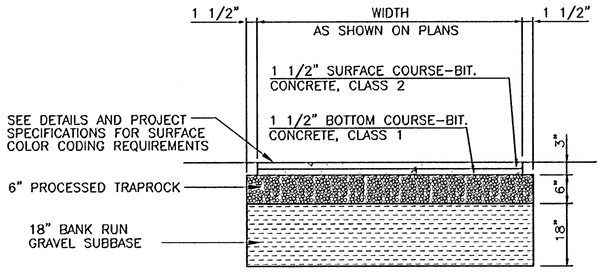

TYPICAL GAME COURT & BASKETBALL COURTS SECTION

(BID ITEM #24)-N.T.S.

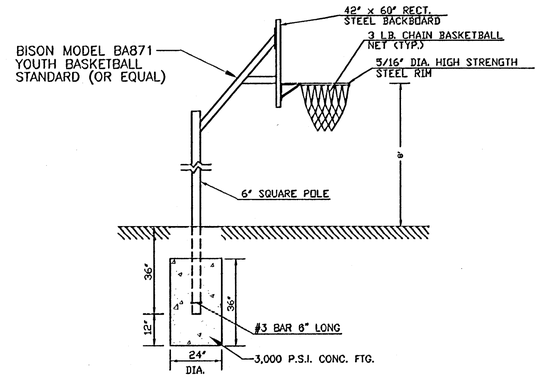

BIDDY BASKETBALL HOOP AND POST

(BID ITEM #356)-N.T.S.

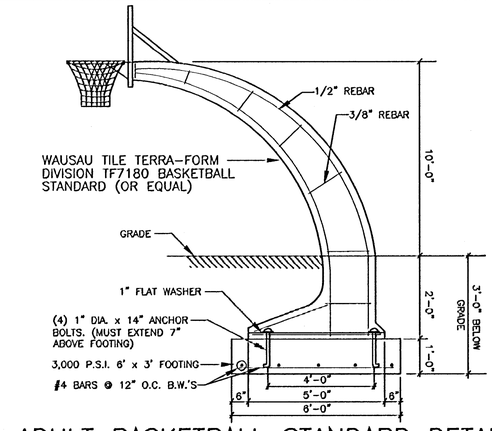

ADULT BASKETBALL STANDARD DETAIL

(BID ITEM #328)-N.T.S.

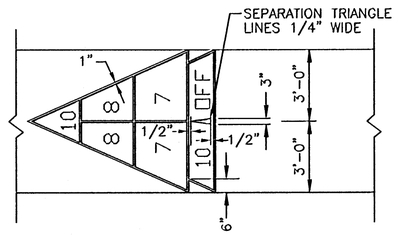

SHUFFLEBOARD COURT MARKING DETAIL

N.T.S.

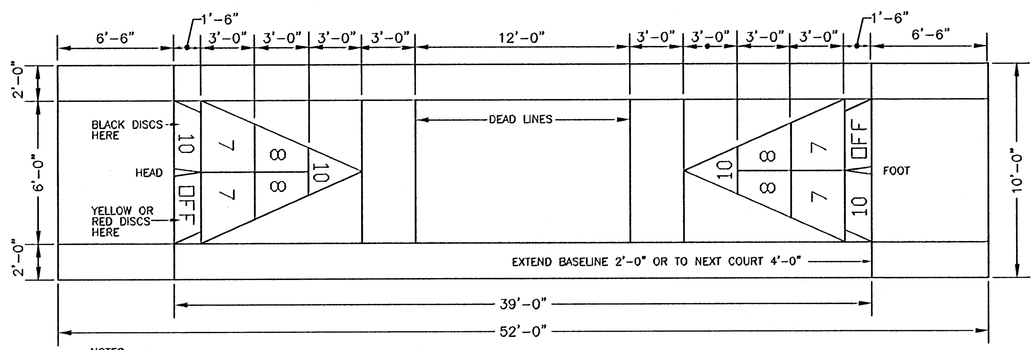

NOTES:

1.) ALL PAINTED LINES ARE TO BE BLACK IN COLOR AND TO BE 1" WIDE.

SHUFFLEBOARD COURT LAYOUT

N.T.S.

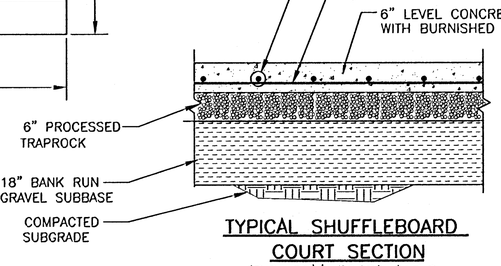

TYPICAL SHUFFLEBOARD COURT SECTION

(BID ITEM #21D)-N.T.S.

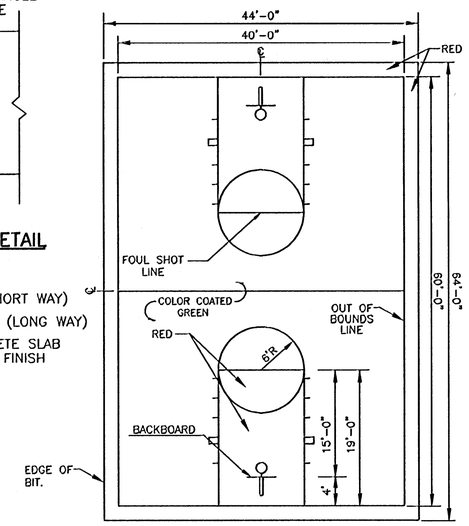

BIDDY BASKETBALL COURT LAYOUT

N.T.S.

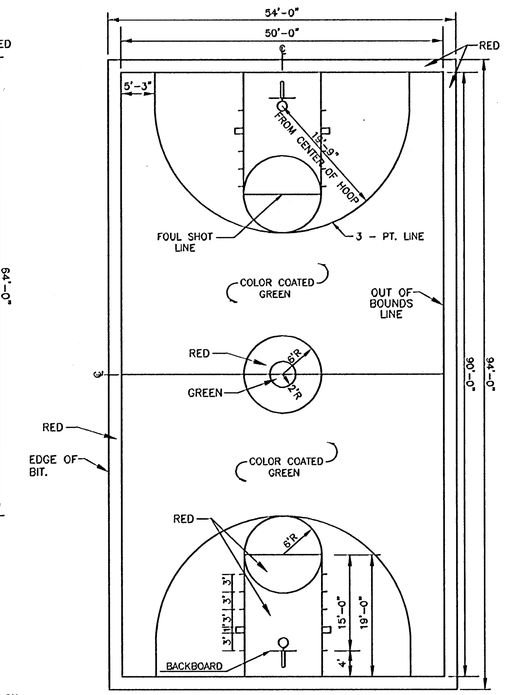

ADULT BASKETBALL COURT LAYOUT

N.T.S.

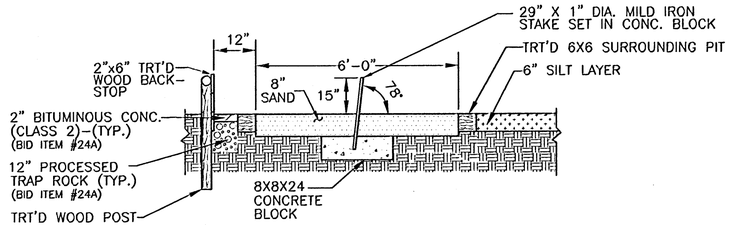

SECTION @ HORSESHOE PIT (BID ITEM NO. 348)

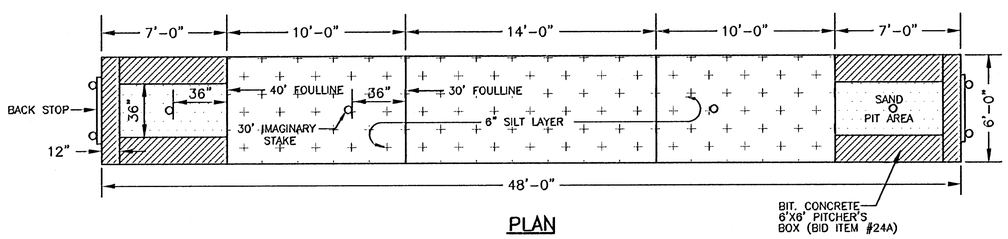

PLAN

HORSESHOE COURT LAYOUT

N.T.S.

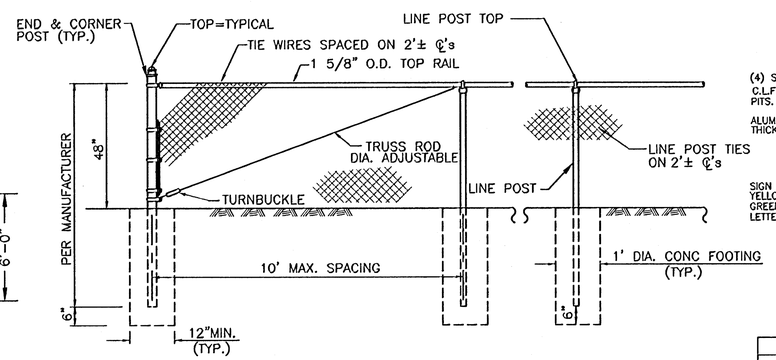

TYPICAL CHAIN LINK FENCE AROUND HORSESHOE COURT

(BID ITEM #321A)-N.T.S.

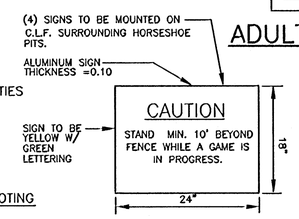

ALUMINUM CAUTION SIGN

(BID ITEM #348)-N.T.S.

BASKETBALL COURT NOTES:

1.) ALL PAINTED LINES ARE TO BE WHITE IN COLOR AND TO BE 2" WIDE

2.) DIMENSIONS ARE SHOWN TO THE INSIDE EDGE OF PAINTED LINES

NO.	DATE	DESCRIPTION	BY
2	5/30/97	AS PER REVIEW COMMENTS	M.E.M.
1	5/97	AS PER REVIEW COMMENTS	M.E.M.

CITY OF HARTFORD, CONNECTICUT
DEPARTMENT OF PUBLIC WORKS
TRANSPORTATION SERVICES BUREAU

COURT DETAILS

SUBMITTED	RECOMMENDED	APPROVED
PURCELL ASSOCIATES		
PROJECT ENGINEER	MANAGER	CITY ENGINEER

DRAWN MEM
CHECKED WDS
SCALE: N.T.S.
DAYBOOK NO. 011361
DATE JUNE 2, 1997
FILE NAME
SHEET 8 OF 14