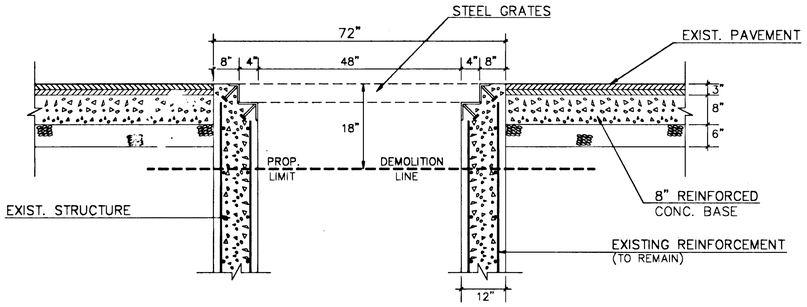

SECTION A–A
(EXISTING STRUCTURE)
N.T.S

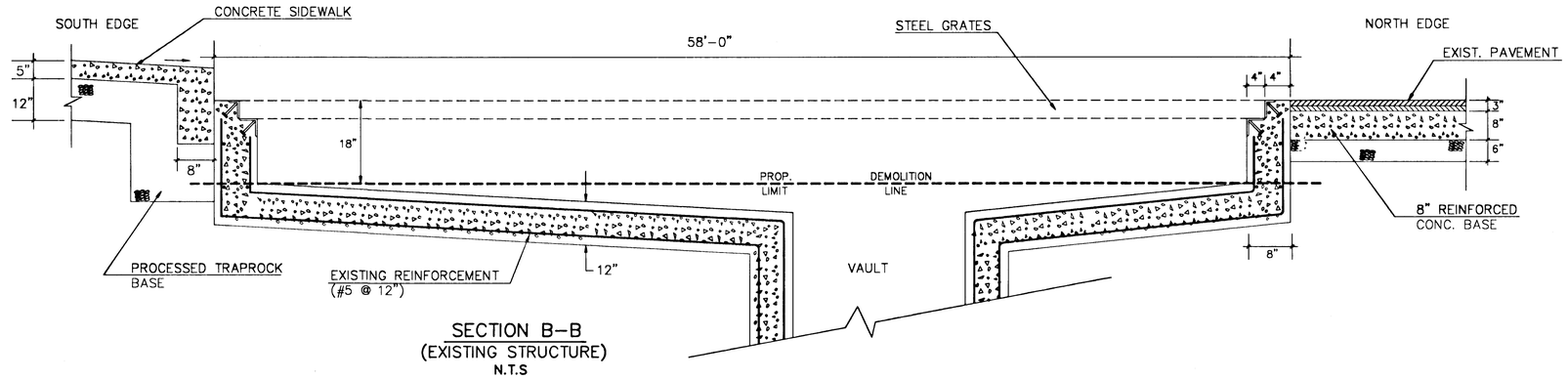

SECTION B–B
(EXISTING STRUCTURE)
N.T.S

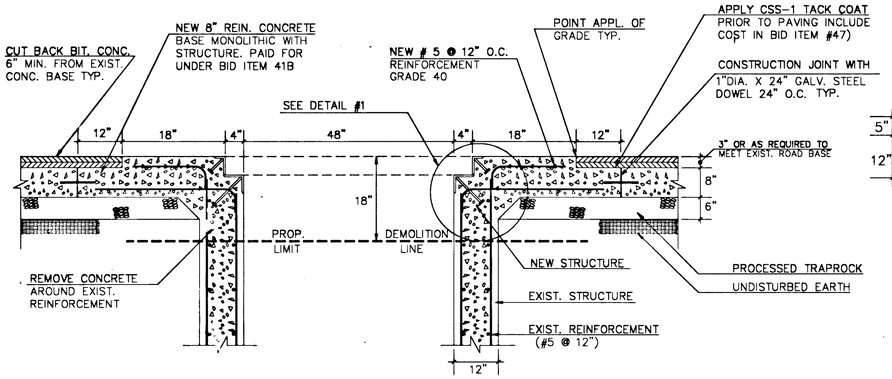

SECTION A–A
(PROPOSED STRUCTURE)
N.T.S

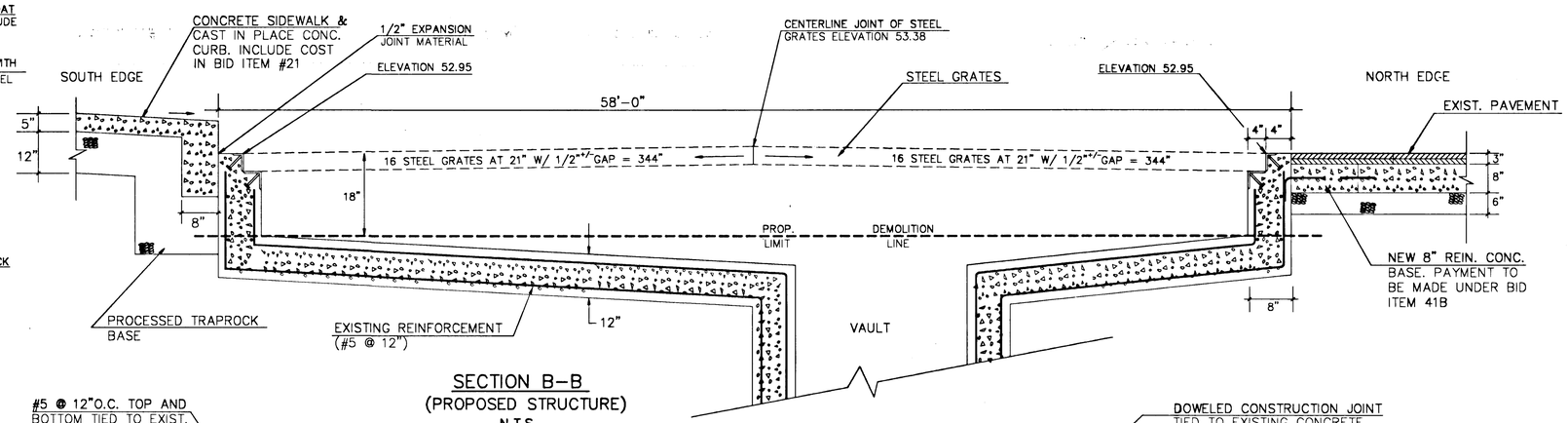

SECTION B–B
(PROPOSED STRUCTURE)
N.T.S

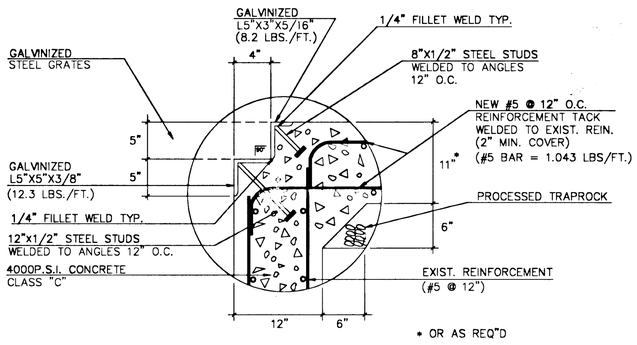

DETAIL #1
N.T.S

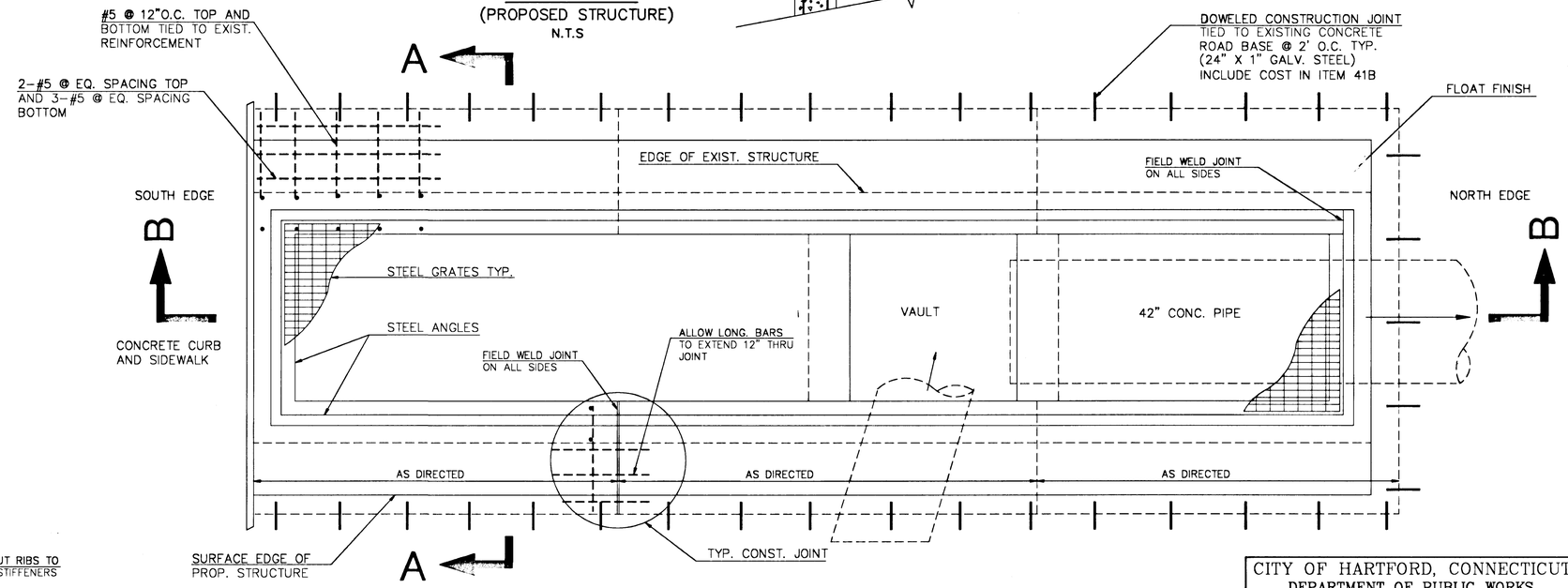

DRAINAGE INLET
PLAN VIEW
N.T.S

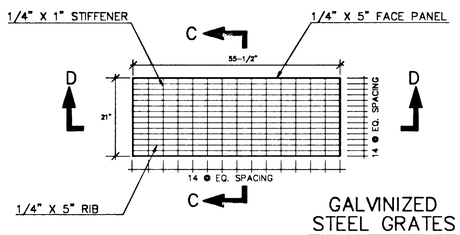

GALVINIZED STEEL GRATES
N.T.S

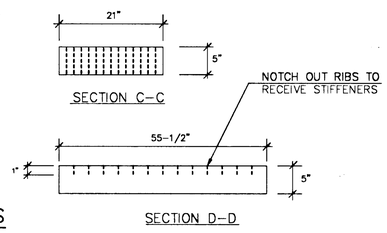

NOTES:
1. CONTRACTOR TO FIELD VERIFY ALL MEASUREMENTS TO INSURE UNIFORMITY AND ACCURACY
2. CONTRACTOR SHALL PROVIDE FABRICATOR ONE (1) EXIST. GRATE FOR USE AS TEMPLATE.
3. CONTRACTOR TO SUBMIT SHOP DRAWINGS PRIOR TO FABRICATION.
4. 1/4" FILLET WELDS AT ALL INTERSECTIONS OR JOINTS.

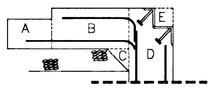

CROSS–SECTIONAL AREA
IN S.F. OF PROP. STRUCTURE
N.T.S

SHAPE	COMPUTATION	AREA (FT.²)
A	PAID UNDER ITEM 41B	0
B *	.833 FT X .917 FT.	.764 FT.²
C	1/2 X .5 FT. X .5 FT.	.125 FT.²
D	1.0 FT. X 1.5 FT.	1.5 FT.²
E	.333 FT. X .417 FT.	(.139 FT.²)
TOTAL		2.25FT.²

* MAY VARY SLIGHTLY

NOTES:
1. STEEL ANGLES AT CENTERLINE/CROWNLINE OF ROAD SHALL BE SHOP FABRICATED TO CONFORM TO THE PROPOSED CROSS–SECTION OF THE ROAD. A CONSTRUCTION JOINT AT THE CENTER–LINE OF THE STRUCTURE WILL NOT BE PERMITTED.
2. SEE PLAN AND PROFILE SHEETS FOR PROPOSED CROSS–SECTIONAL GRADE ACROSS ROADWAY.
3. ALL REINFORCEMENT TO BE GRADE 40 UNLESS OTHERWISE NOTED.

CITY OF HARTFORD, CONNECTICUT
DEPARTMENT OF PUBLIC WORKS
ENGINEERING DIVISION

MISCELLANEOUS DETAILS FOR
CAPITOL AVENUE DRAINAGE INLET

SUBMITTED	RECOMMENDED	APPROVED
PROJECT ENGINEER	DIVISION ENGINEER	CITY ENGINEER

SHEET 4 OF 6	DRAWN J.L.B.	SCALE AS NOTED	DAYBOOK NO. 010818C
	CHECKED		DATE FEB. 1992
			FILE NAME CAP2.DWG