DETAILS OF DRAINAGE SYSTEM
FOR
POPE PARK DRIVE

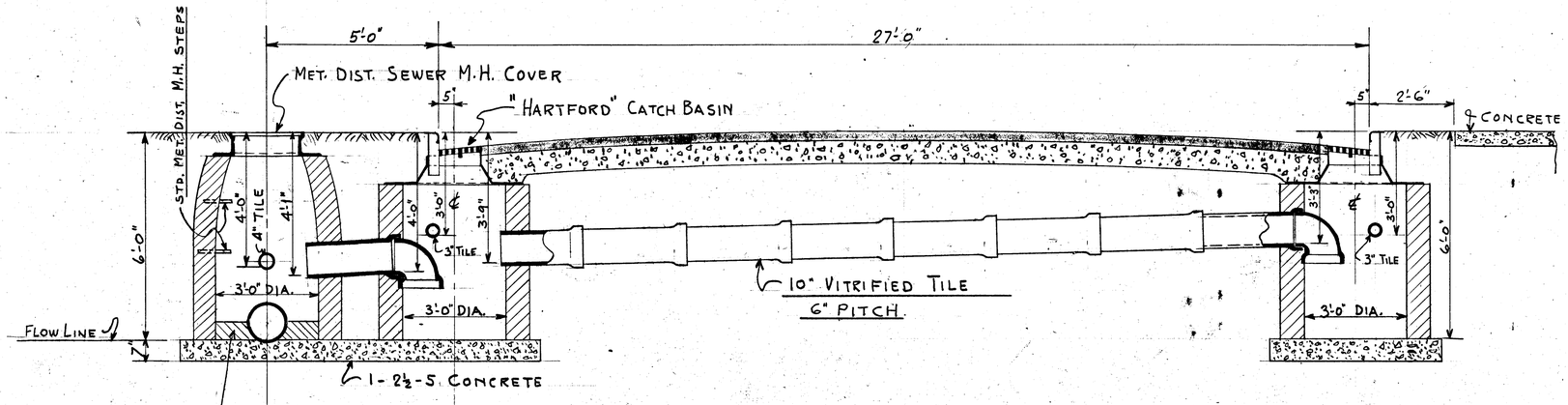

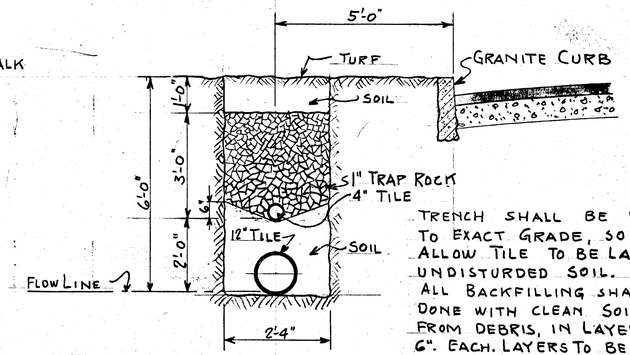

TRENCH SHALL BE DUG TO EXACT GRADE, SO AS TO ALLOW TILE TO BE LAID ON UNDISTURDED SOIL.
ALL BACKFILLING SHALL BE DONE WITH CLEAN SOIL, FREE FROM DEBRIS, IN LAYERS OF 6". EACH. LAYERS TO BE PROPERLY TAMPED.

AFTER COMPLETION OF MANHOLE REMOVE UPPER HALF OF 12" TILE AND BUILD UP BOTTOM WITH BRICK.

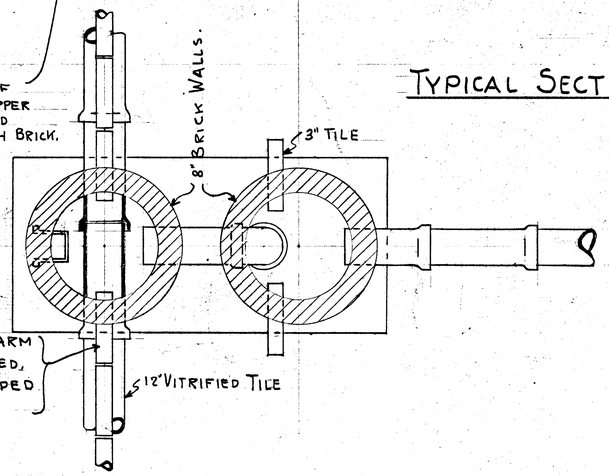

Used 4" Vitrified Tile, furnished by Park Dept.

TYPICAL SECTION THRU CATCH BASINS & MANHOLES
LOOKING NORTH

TYPICAL SECTION THRU SEWER TRENCH
LOOKING NORTH.

CITY OF HARTFORD
DEPARTMENT OF ENGINEERING
AUGUST 1938 DAYBOOK NO. 07996
SCALE ½" = 1'-0"

A.S.