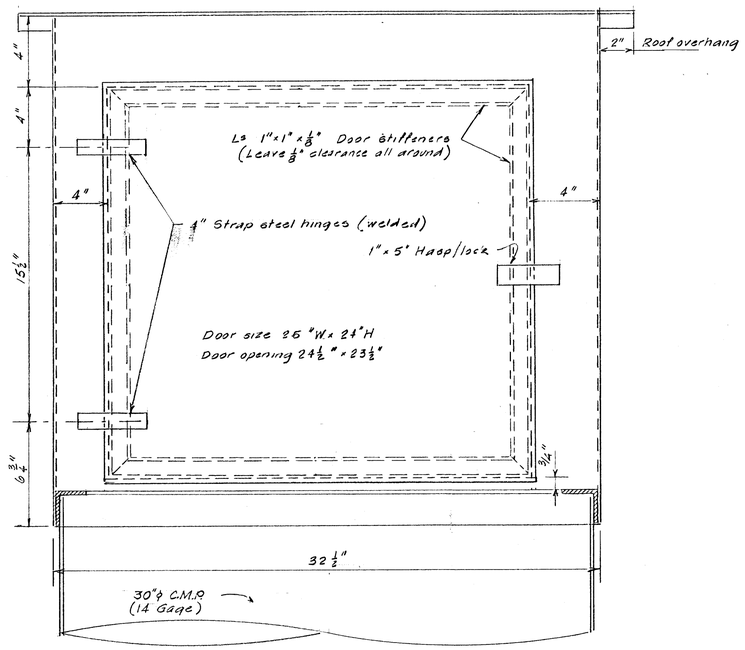

⅛" Steel Plate
Top & Sides

FRONT VIEW

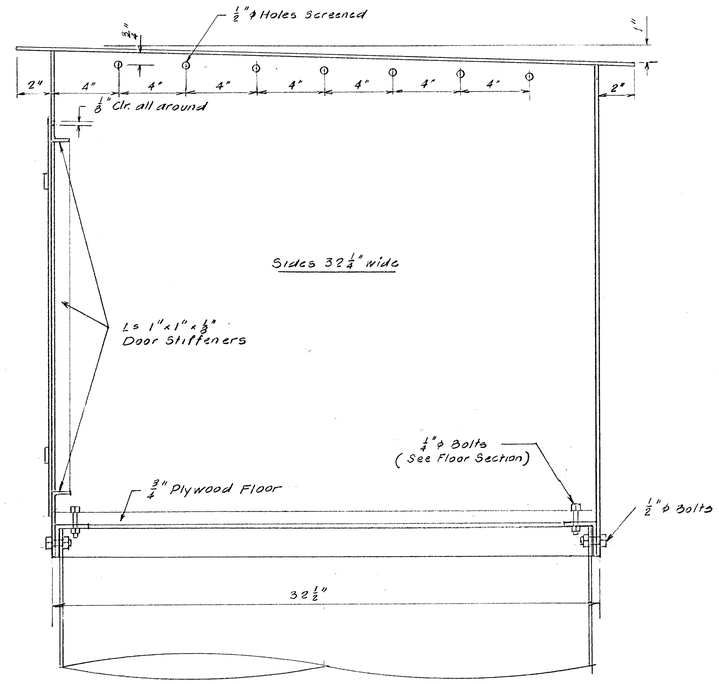

SIDE VIEW

Scale ¼"=1"

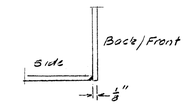

CORNER SECTION
N.T.S.

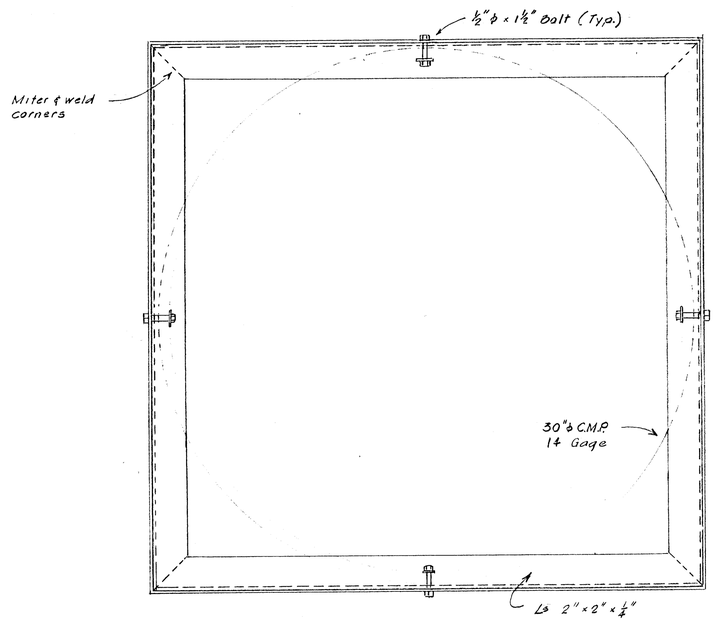

SECTION A-A

Scale ¼"=1"

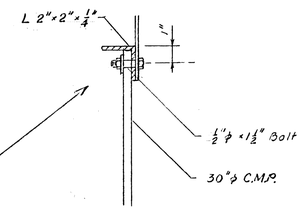

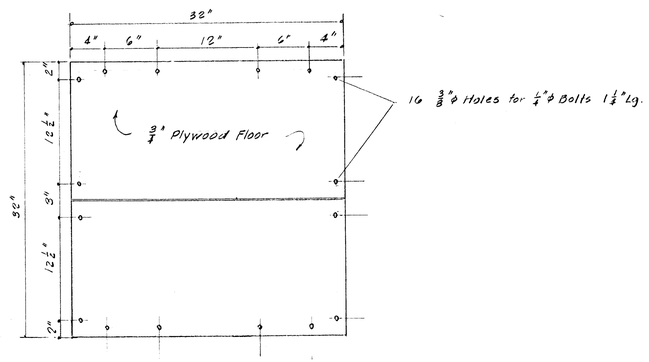

FLOOR BOARDS

⅛"=1"

¾" Marine Plywood
2 Coats of Paint

CITY OF HARTFORD, CONNECTICUT
DEPARTMENT OF PUBLIC WORKS
BUREAU OF ENGINEERING SERVICES

RIVER GAGING SHELTER

SUBMITTED	RECOMMENDED	APPROVED
DIVISION ENGINEER	CHIEF OF ENG. SERV.	ASST. DIR. & CITY ENG.

DRAWN RED
CHECKED

SCALE ¼"=1" ⅛"=1"

DAYBOOK NO.

DATE March 31, 1983