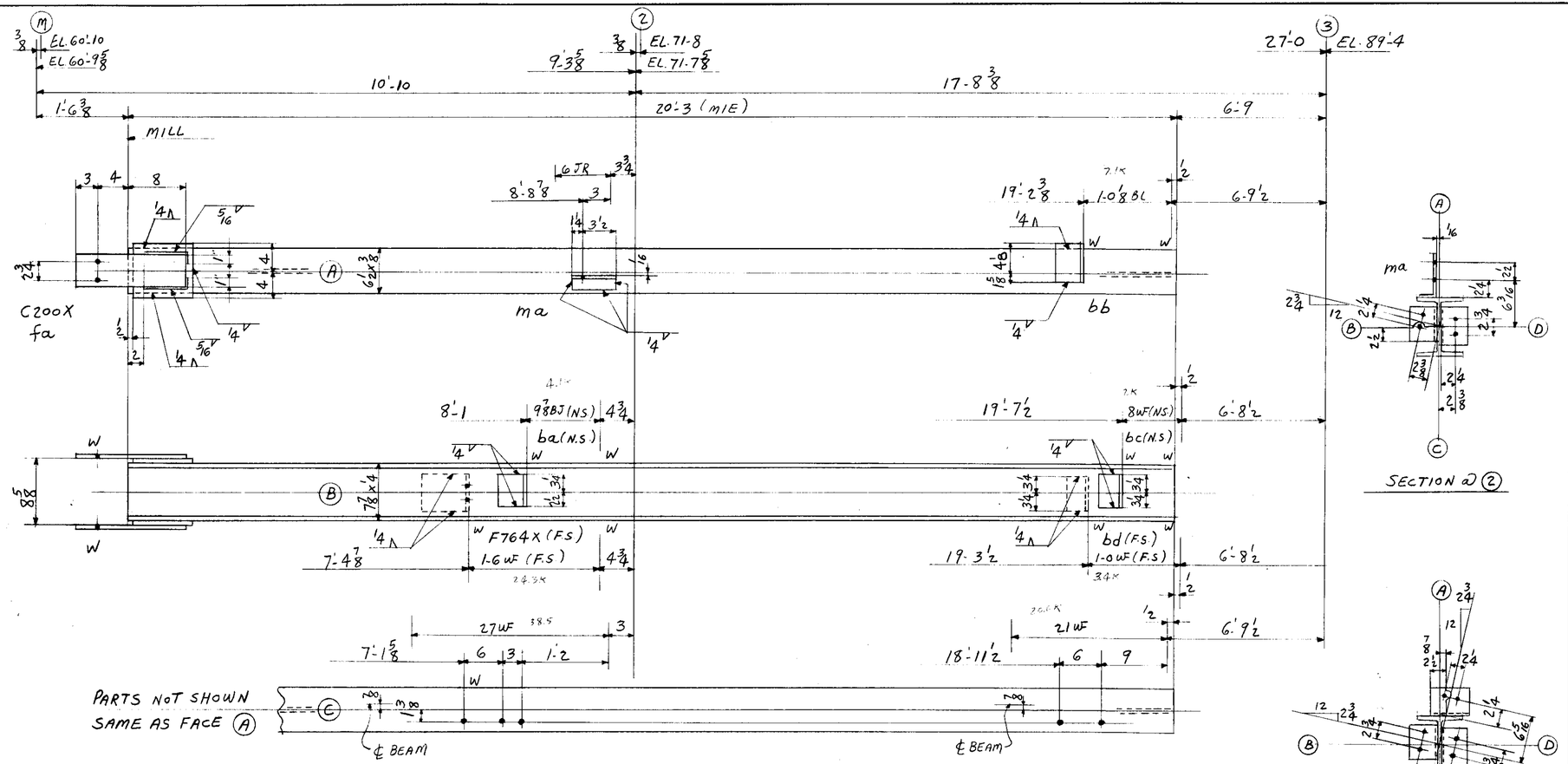

ONE COL. MK.-H55 (M-3) (FACE (A) NORTH)

SECTION @ (2)

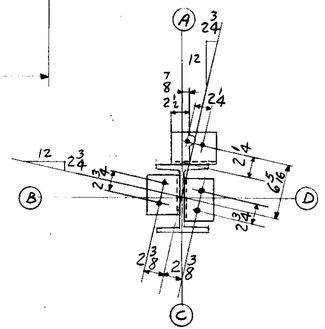

SECTION @ (3)

5-3/4 ϕ B x 13/16" G

LEHIGH STRUCTURAL STEEL CO.

ALLENTOWN, PA.

NAME OF STRUCTURE

THE HARTFORD PUBLIC LIBRARY
HARTFORD, CONNECTICUT

WEIGHT	NO. PCS.	ASS'M MK.	SHAPE	LENGTH		REMARKS	ORDERED
	ONE	COL.-MK-H55 (M-3)					
486	1		8WF24	20	3	MIE	20-3 1/4
16	2	C200X	PLS. 5 x 3/8	1	3		
14	2	fa	FILLS. 8 x 3/8	0	8 1/2		
14	1	F764X	L. 7x4x3/4	0	6 1/4		
5	1	ba	L. 4x4x3/8	0	5 3/4		
5	1	bb	DO	0	5 3/4		
5	1	bc	L. 4x3x3/8	0	6 1/2		
5	1	bd	DO	0	6 1/2		
5	1	ma	L. 6x2 1/2x3/8	0	4 3/4	C.F. L. 6x3 1/2	
3	PAINT						
558	TOTAL						

TOTAL	ORD.	PLATES	STD	BOLT	RIV.	BAR	SM. STD.	PAINT
558	486	14	39			16		3

RIVETS NONE

OPEN HOLES 13/16 ϕ

DET HJS DATE 10-19-54

CHK'R CZ DATE 11-5-54

IN CHARGE CLF

REVISIONS

CONTRACT NO. 4090

SHEET NO. C99

LOT 5

WELD