LEHIGH STRUCTURAL STEEL CO.
ALLENTOWN, PA.

NAME OF STRUCTURE
THE HARTFORD PUBLIC LIBRARY
HARTFORD, CONNECTICUT

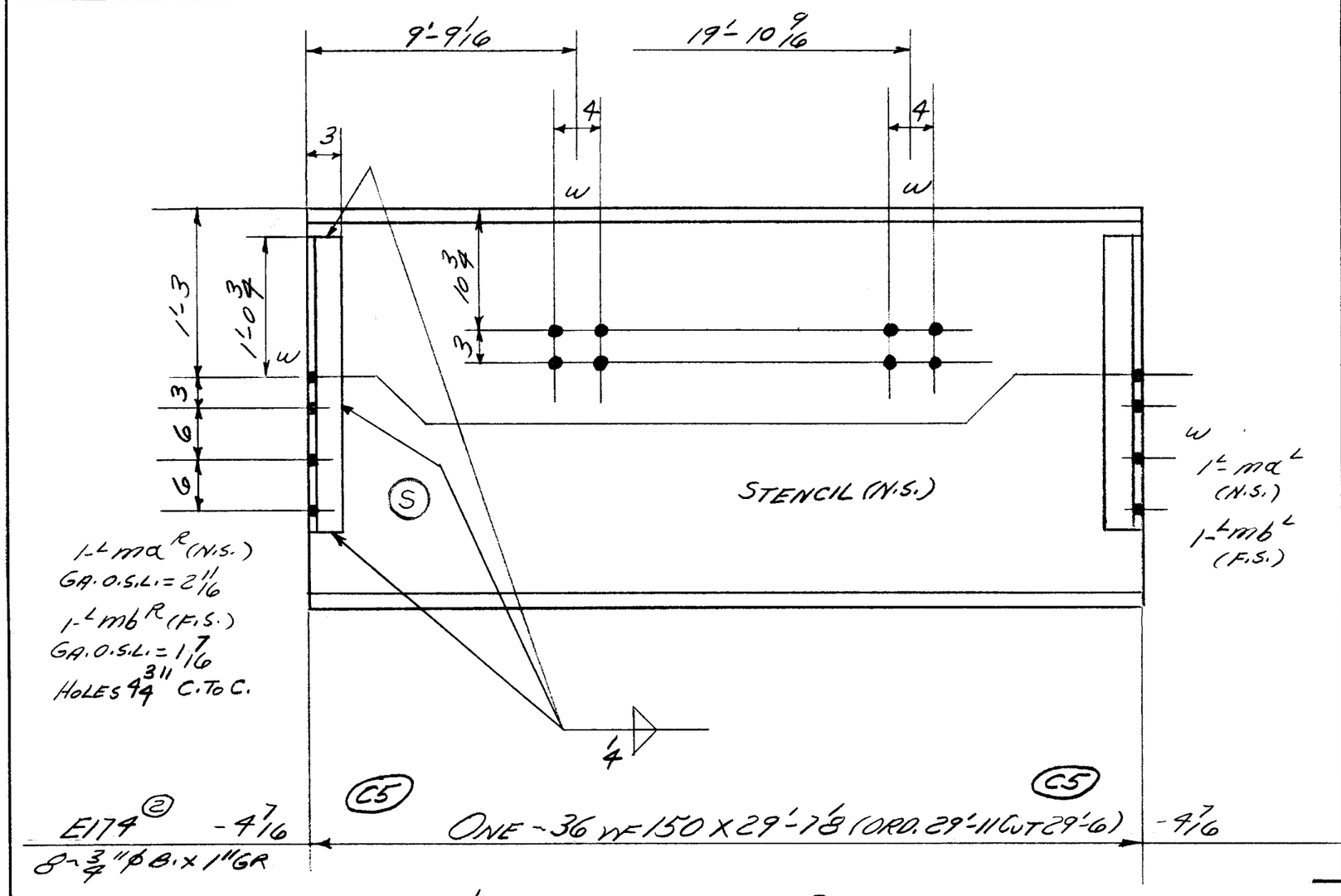

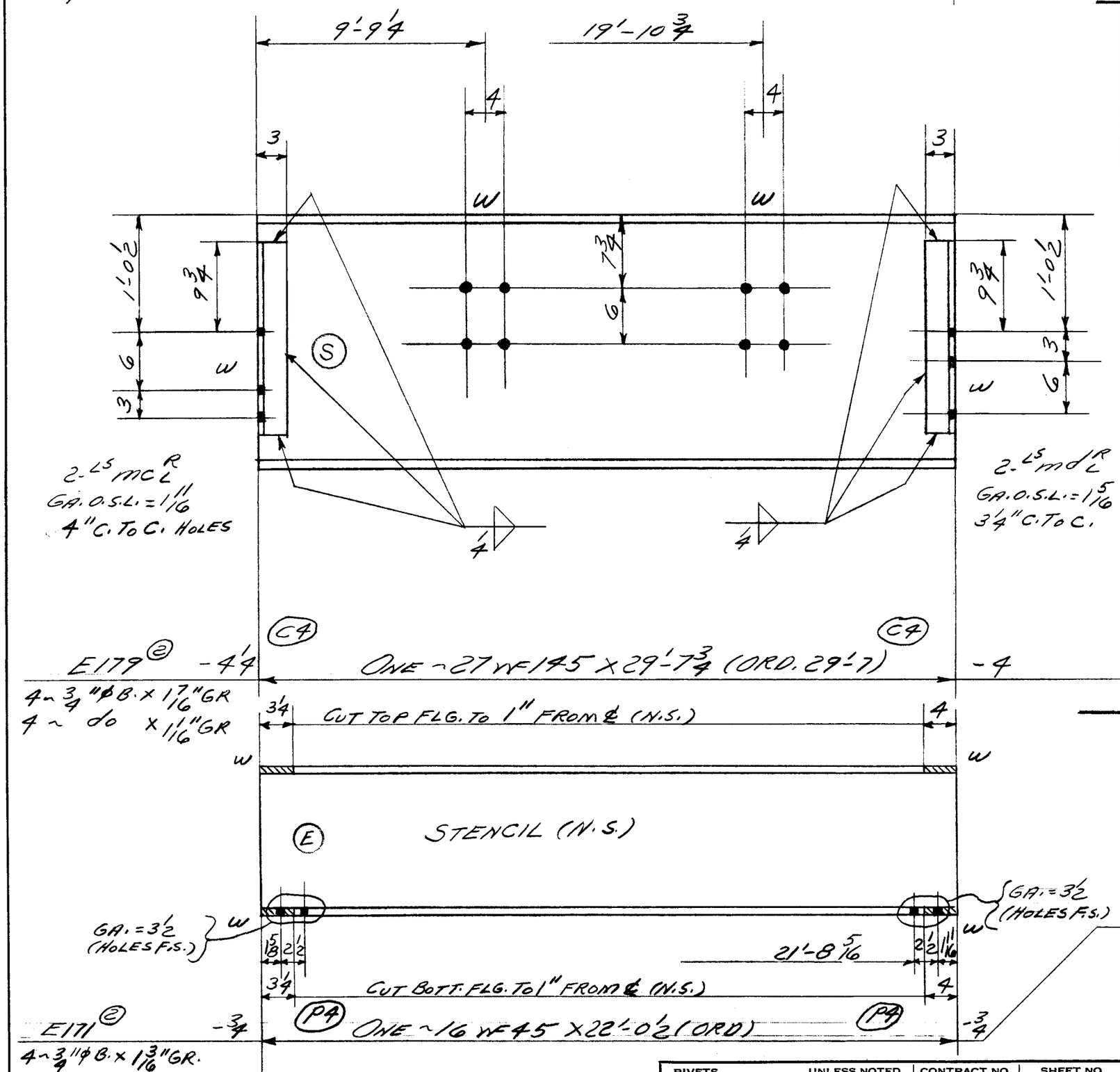

WEIGHT	NO. PCS.	ASS'M MK.	SHAPE	LENGTH		REMARKS	ORDERED
23	PAINT						
48	2	ma R L	LS 4x3x7/16	2	5 1/2		
41	2	mb R L	LS 3x2 3/8x7/16	2	5 1/2	C.F. 3x3x7/16	
4425							
4537	TOTAL						
27	PAINT						
28	2	mc R L	LS 3x3x7/16	1	8 1/2		
26	2	md R L	LS 3x2 1/2x7/16	1	8 1/2		
4389							
4365	TOTAL						
5	PAINT						
992							
997							

TOTAL	ORD.	PLATES	STD.	BOLT	RIV.	BAR	SM. STD.	PAINT	WELD
9899	9706		143					50	

DET. J.B.O. DATE 11-30-54 CHK'R. F.F. DATE 12-15-54 IN CHARGE FISHER

RIVETS UNLESS NOTED	CONTRACT NO.	SHEET NO.	REVISIONS	CONTRACT NO.	SHEET NO.
NONE	4090	B767		4090	B767
OPEN HOLES 13/16"φ UNLESS NOTED					

LOT #8 WELD