LEHIGH STRUCTURAL STEEL CO.
ALLENTOWN, PA.

NAME OF STRUCTURE
THE HARTFORD PUBLIC LIBRARY
HARTFORD, CONNECTICUT

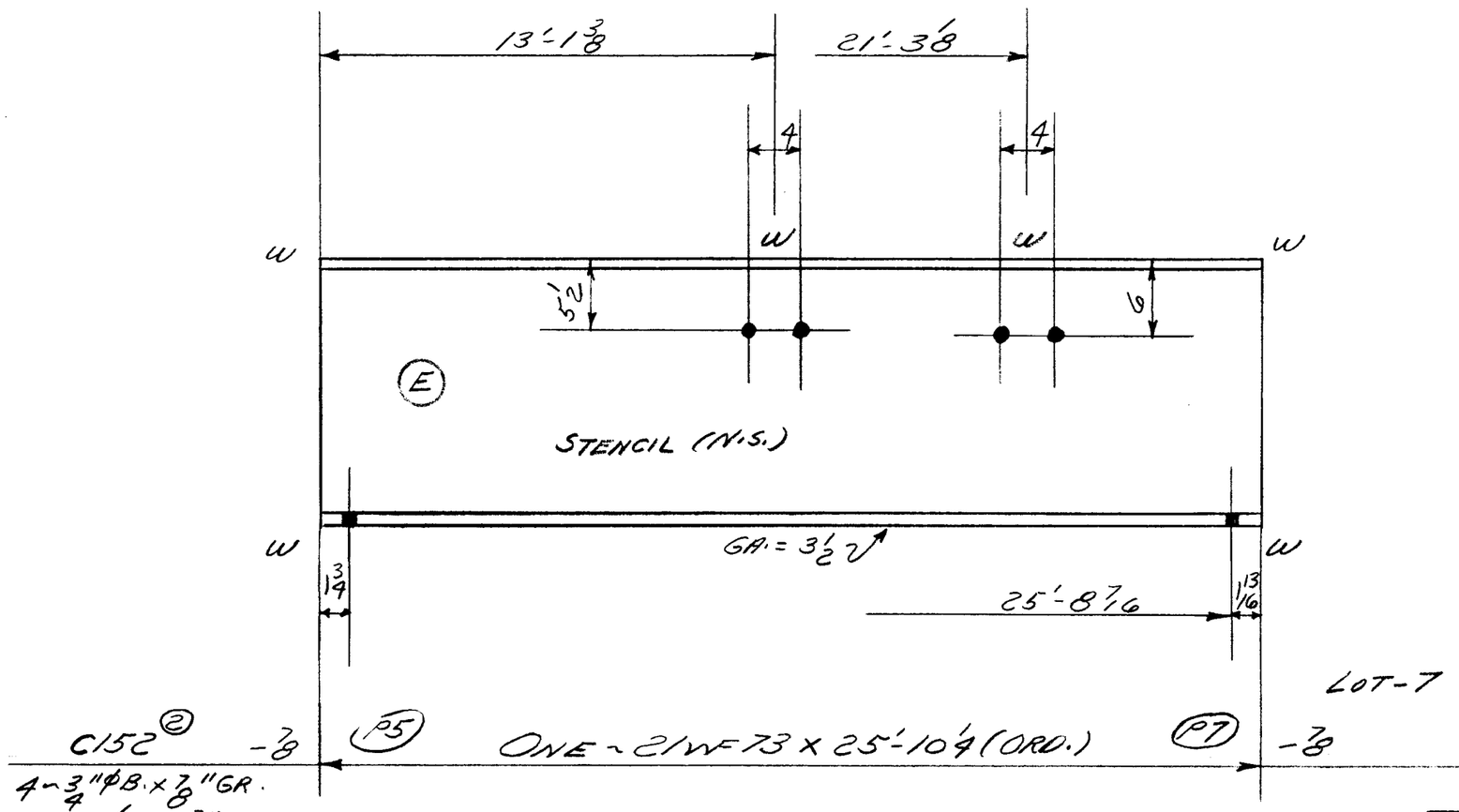

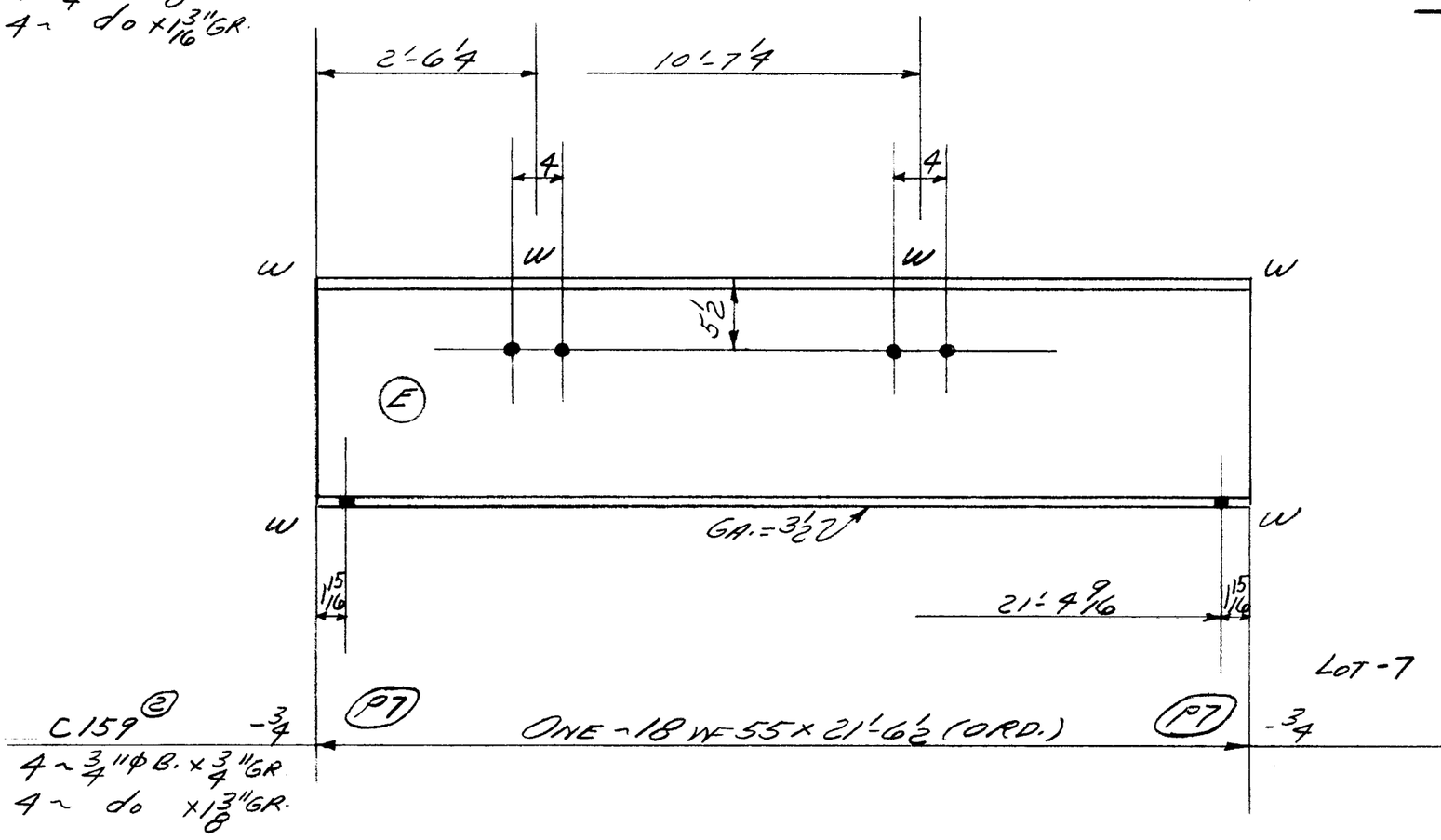

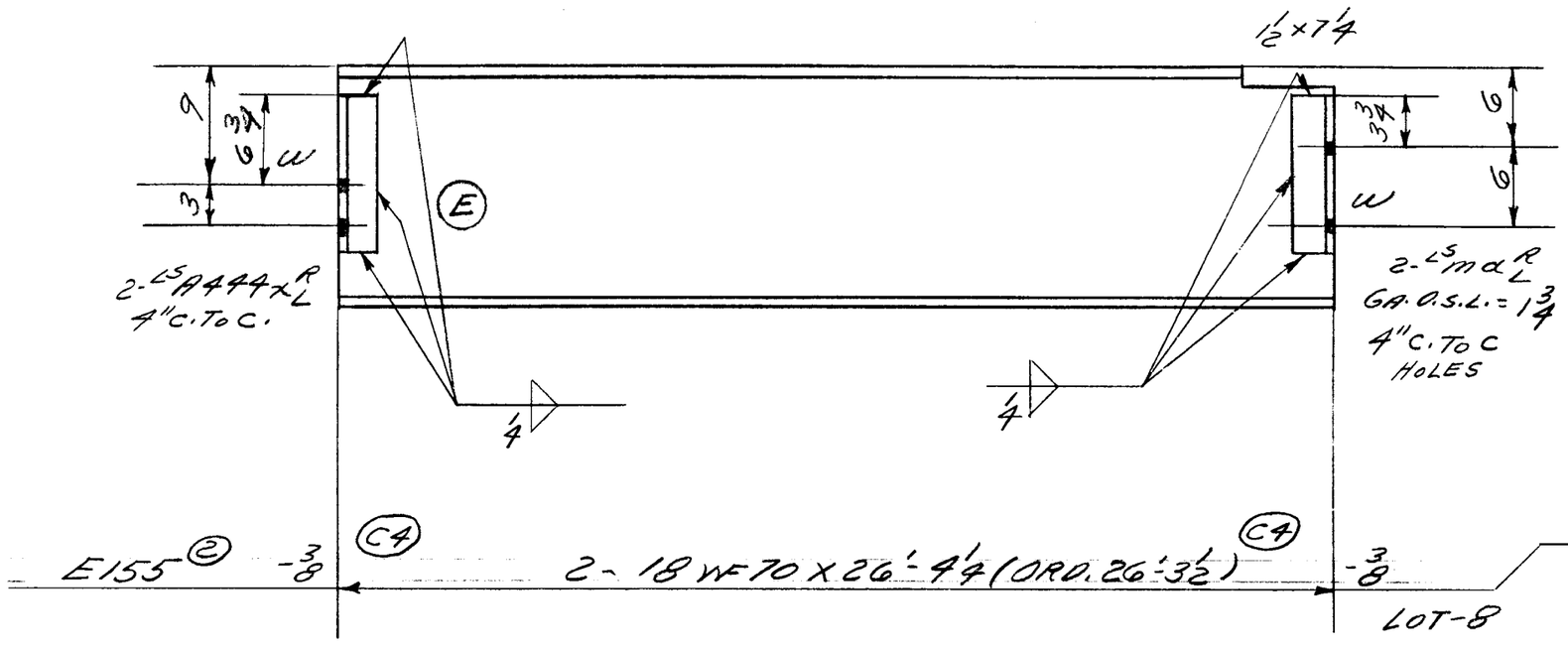

WEIGHT	NO. PCS.	ASS'M MK.	SHAPE	LENGTH	REMARKS	ORDERED
9	PAINT					
1887						
1896	TOTAL					
19	PAINT					
1 1/2	2	A444 R/L	LS 3 x 3 x 3/8	0 11 1/2		
1 1/2	2	mb R/L	do	0 11 1/2		
3681						
3728	TOTAL					

TOTAL	ORD.	PLATES	STD.	BOLT	RIV.	BAR	SM. STD.	PAINT	WELD
6815	6753		28					34	

DET. J.B.O. DATE 11-29-54 CHK'R. F.F. DATE 12-15-54 IN CHARGE FISHER

RIVETS UNLESS NOTED	CONTRACT NO.	SHEET NO.	REVISIONS	CONTRACT NO.	SHEET NO.
NONE	4090	B763		4090	B763
OPEN HOLES 13/16" UNLESS NOTED					

LOT #7-8 WELD