LEHIGH STRUCTURAL STEEL CO.
ALLENTOWN, PA.

NAME OF STRUCTURE
THE HARTFORD PUBLIC LIBRARY
HARTFORD - CONNECTICUT

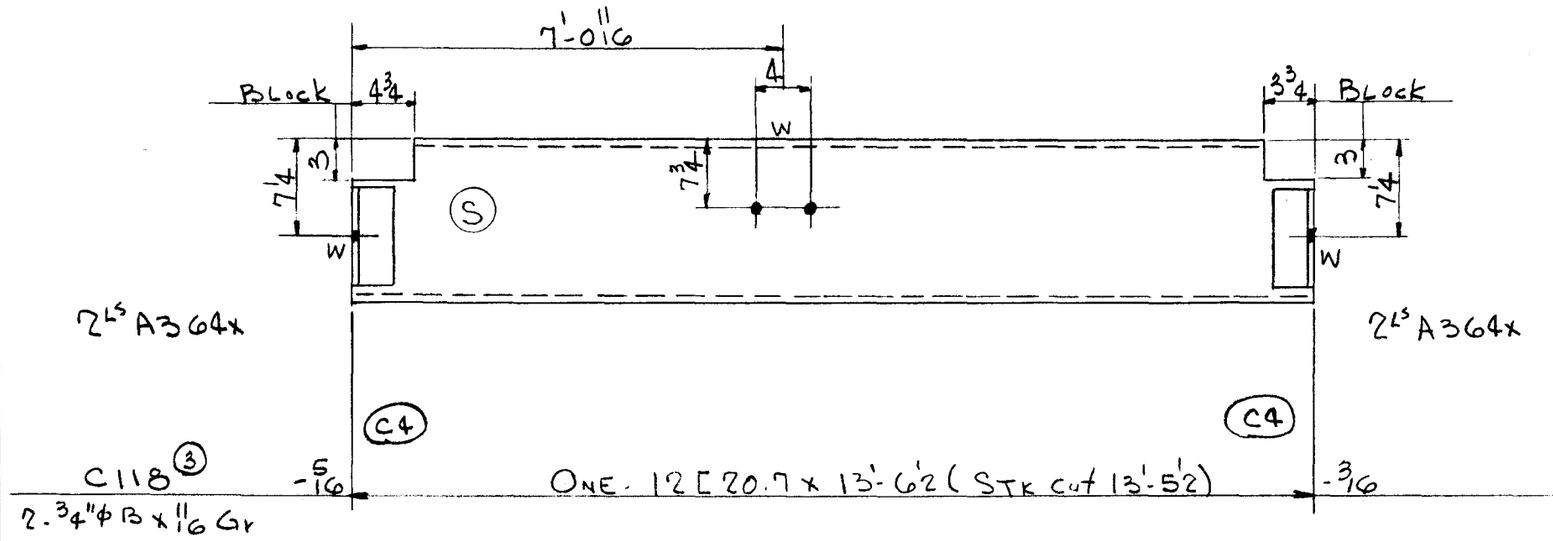

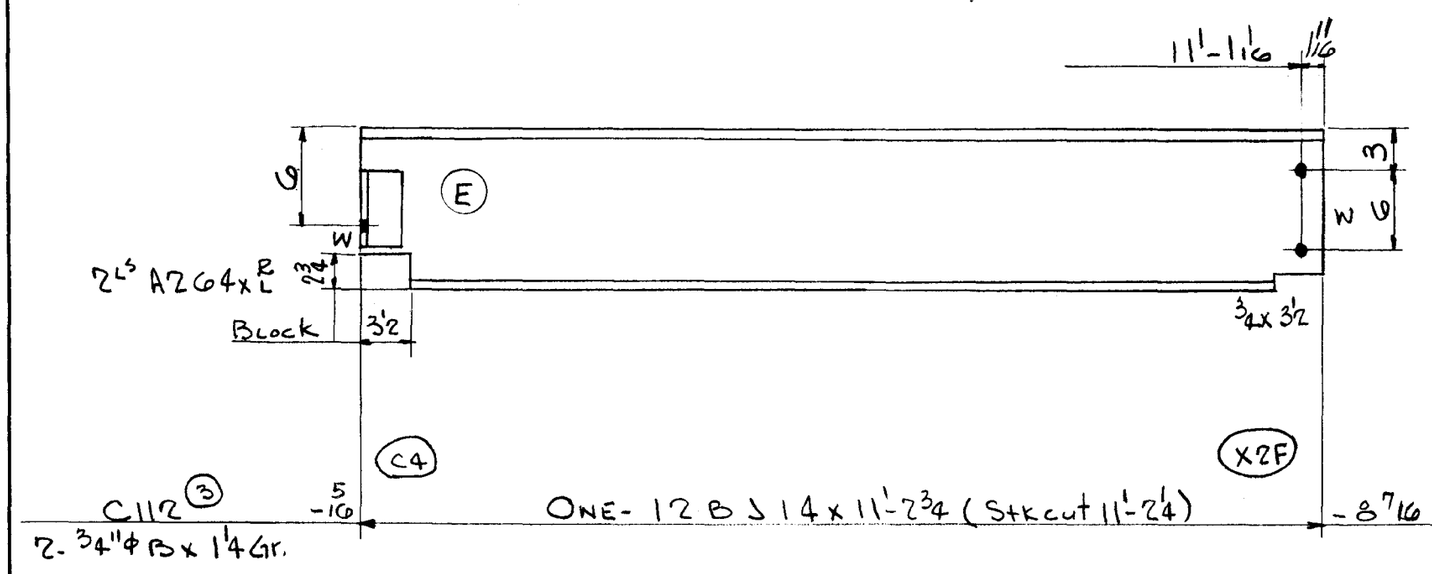

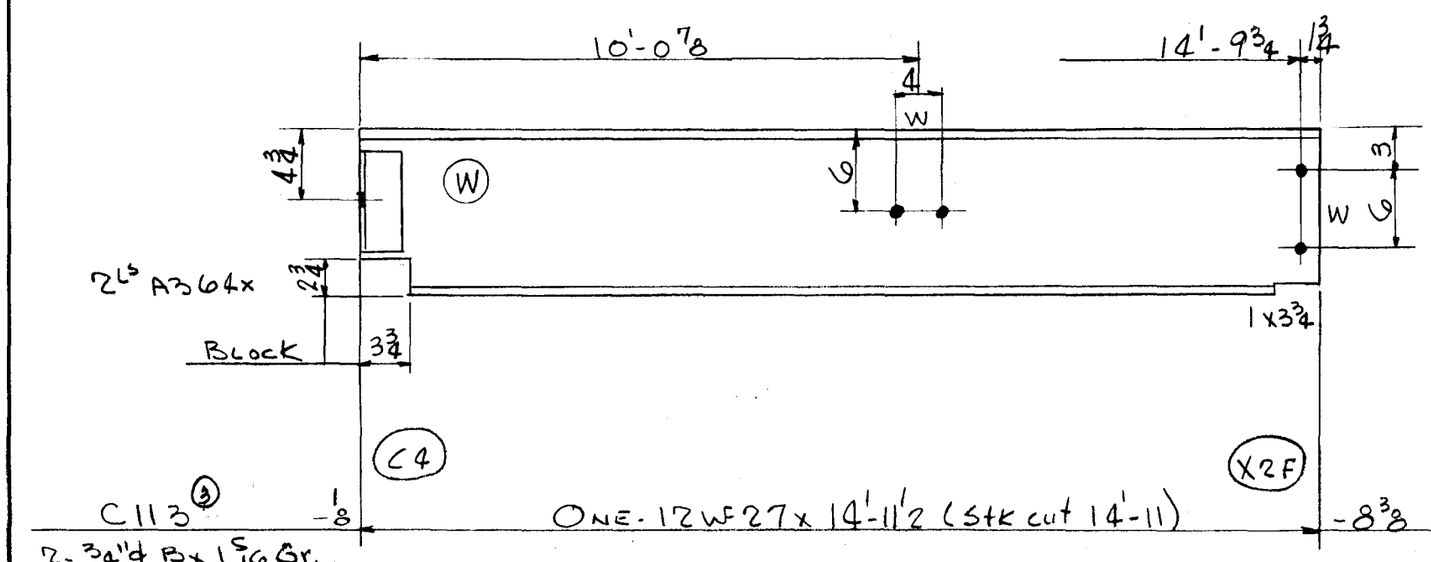

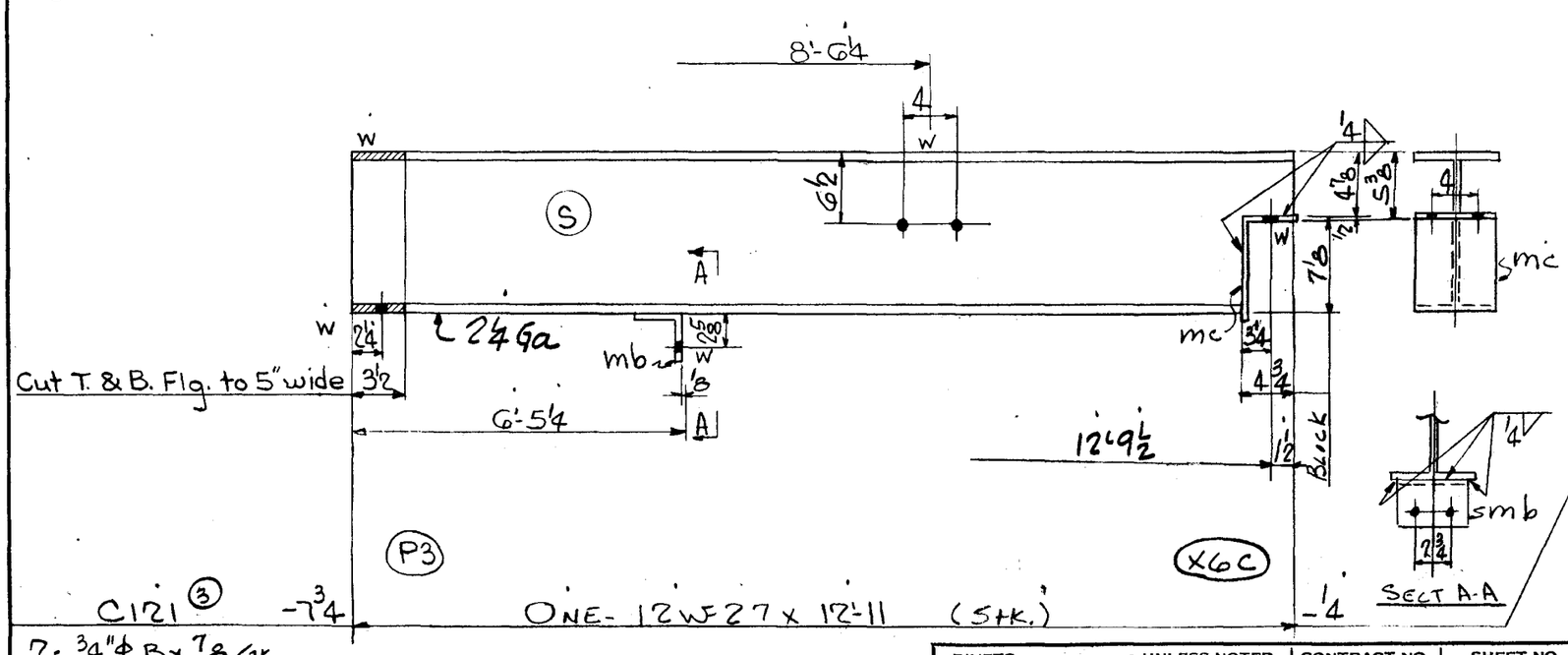

WEIGHT	NO. PCS.	ASS'M MK.	SHAPE	LENGTH		REMARKS	ORDERED
1	PAINT						
18	4	A364x					
279							
298	TOTAL						
1	PAINT						
6	2	A264x L R					
157							
164	TOTAL						
7	PAINT						
9	2	A364x					
403							
412	TOTAL						
7	PAINT						
5	1	mb	L 3 1/2 x 3 1/2 x 1/2	0	5		
17	1	mc	L 8 x 6 x 1/2	0	6 1/2		
349							
368	TOTAL						

TOTAL	ORD.	PLATES	STD.	BOLT	RIV.	BAR	SM. STD.	PAINT	WELD
1244			1238					6	

DET.	DATE	CHK'R.	DATE	IN CHARGE
LWS	11-27-54	R.C.C.	12-9-54	FISHER

~~RIVETS~~ ~~UNLESS NOTED~~
OPEN HOLES 13/16"ϕ ~~UNLESS NOTED~~

CONTRACT NO.	SHEET NO.
4090	B642

REVISIONS
1-11-55: Appl. Changes to C121

CONTRACT NO.	SHEET NO.
4090	B642

WELD Lot 7