LEHIGH STRUCTURAL STEEL CO.
ALLENTOWN, PA.

NAME OF STRUCTURE
HARTFORD PUBLIC LIBRARY
HARTFORD, CONN.

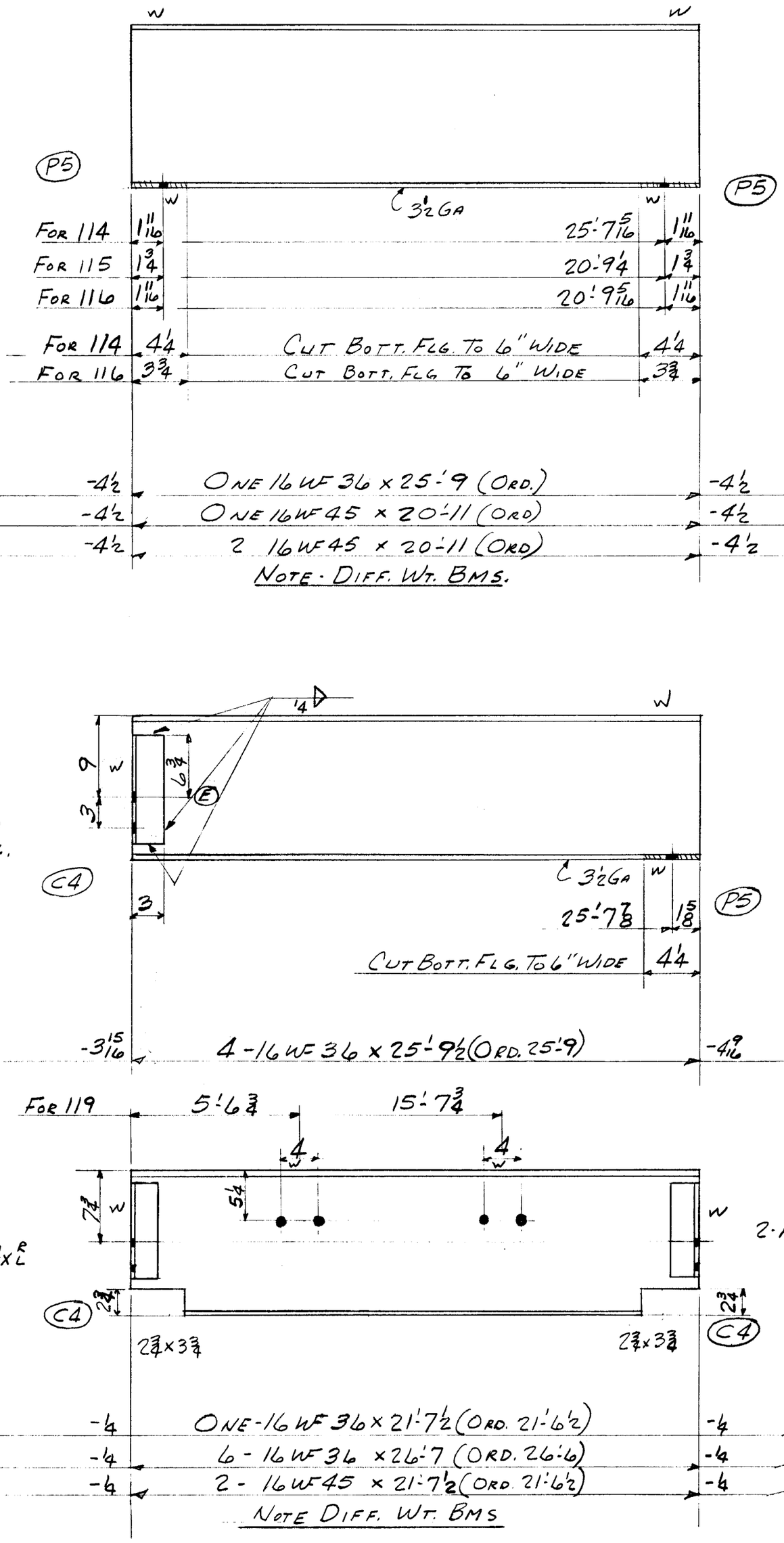

WEIGHT		NO. PCS.	ASS'M MK.	SHAPE	LENGTH		REMARKS	ORDERED
927-5	927							
941-5	941							
1883-9	1892							
	19	PAINT						
	51	8	MAR	L 3×2½×3/8	0	11½		
	3708							
	3778	TOTAL						
	43	PAINT						
	249	36	A454×L					
	775							
	5724							
	1939							
	8730	TOTAL						

TOTAL	ORD.	PLATES	STD.	BOLT	RIV.	BAR	SM. STD.	PAINT	WELD
16278	15897		300					81	

DET.	DATE	CHK'R.	DATE	IN CHARGE
F.L.G.	Nov. 19-54	CZ	12-7-54	C.F.

RIVETS	UNLESS NOTED	CONTRACT NO.	SHEET NO.	REVISIONS	CONTRACT NO.	SHEET NO.
NONE		4090	B621		4090	B621
OPEN HOLES 13/16 ϕ	~~UNLESS NOTED~~					

LOT #1 WELD