**LEHIGH STRUCTURAL STEEL CO.**
ALLENTOWN, PA.

**NAME OF STRUCTURE**
THE HARTFORD PUBLIC LIBRARY
HARTFORD - CONNECTICUT

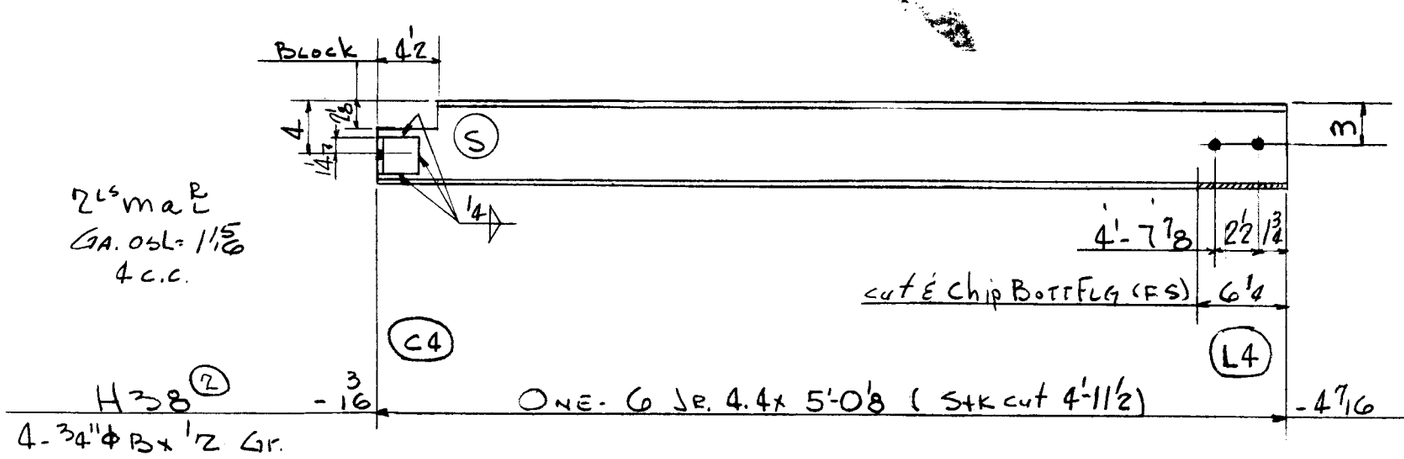


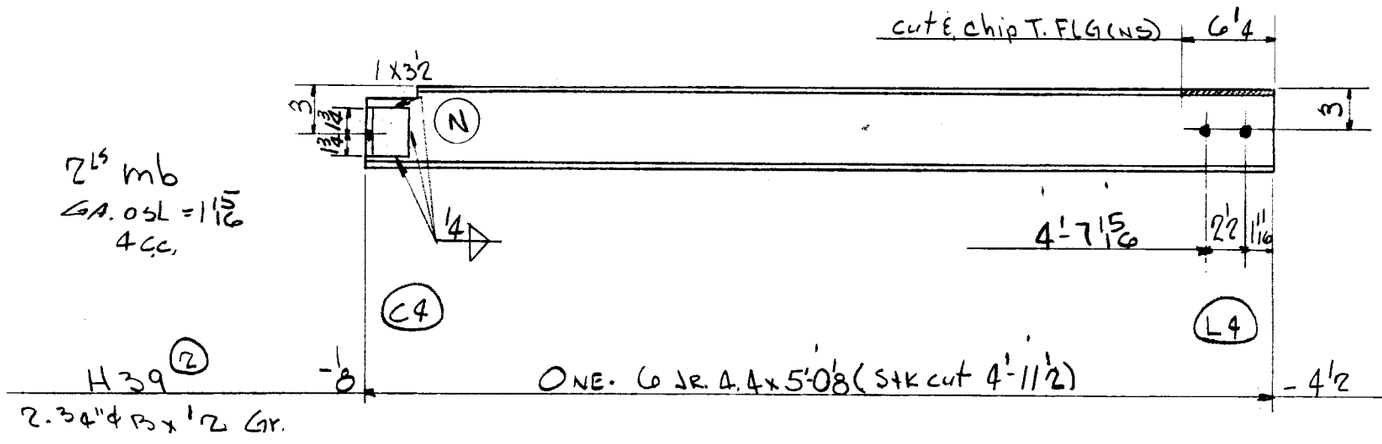


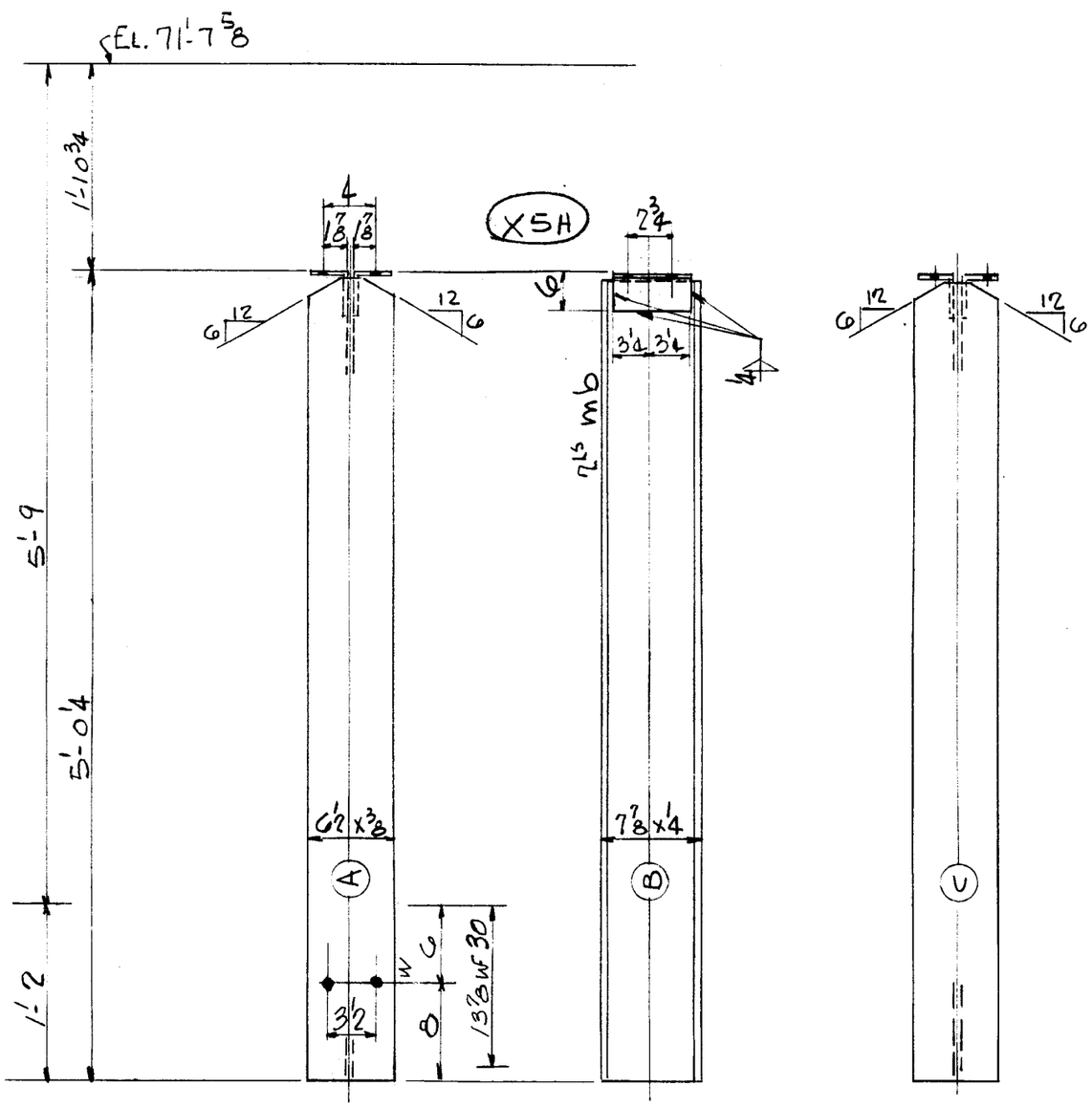


ONE HANGER MK H45② FACE Ⓐ NORTH

2-¾"φ Bx ¾ Gr.

| WEIGHT | NO. PCS. | ASS'M MK. | SHAPE | LENGTH | | REMARKS | ORDERED |
|---|---|---|---|---|---|---|---|
| – | PAINT | | | | | | |
| 3 | 2 | ma | L 3x3x⅜ | 0 | 2½ | | |
| 21 | | | | | | | |
| 24 | TOTAL | | | | | | |
| – | PAINT | | | | | | |
| 4 | 2 | mb | L 3x3x⅜ | 0 | 3½ | | |
| 21 | | | | | | | |
| 25 | TOTAL | | | | | | |

ONE HANGER MK H45②

| | | | | | | | |
|---|---|---|---|---|---|---|---|
| 120 | 1 | | 8WF24 | 4 | 11¾ | | Stk |
| 17 | 2 | mb | L 6x3½x½ | 0 | 6½ | | |
| 1 | PAINT | | | | | | |
| 138 | TOTAL | | | | | | |

| TOTAL | ORD. | PLATES | STD. | BOLT | RIV. | BAR | SM. STD. | PAINT | WELD |
|---|---|---|---|---|---|---|---|---|---|
| 187 | | | 186 | | | | | 1 | |

| DET. | DATE | CHK'R. | DATE | IN CHARGE |
|---|---|---|---|---|
| LWS | 11-10-54 | CZ | 12-2-54 | FISHER |

~~RIVETS~~ ~~UNLESS NOTED~~
OPEN HOLES 13/16"φ ~~UNLESS NOTED~~

| CONTRACT NO. | SHEET NO. |
|---|---|
| 4090 | B461 |

REVISIONS
1-24-55: Appl. change - H38 & H39 made 3" longer

| CONTRACT NO. | SHEET NO. |
|---|---|
| 4090 | B461 |

WELD LOT 5