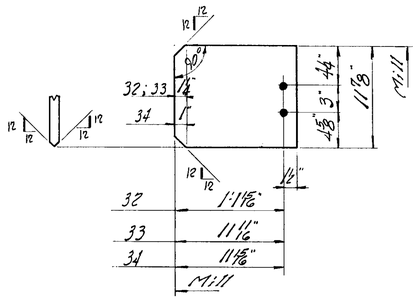

2 - Plates MK. E1-32 ; E2-32 (1 each)

4 - Plates MK. E1-33 ; E2-33 ; D1-33 ; D2-33 (1 each)

6 - Plates MK. 1/E1-34 ; 2/E2-34 ; 1/D1-34 ; 2/D2-34

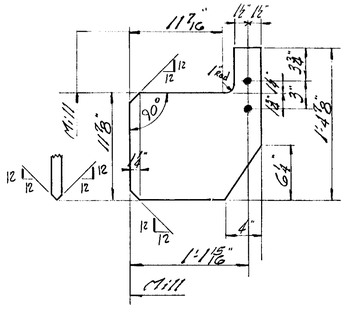

One-Plate MK. D2-40

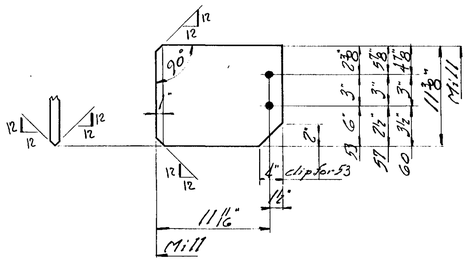

One-Plate MK. E2-53

2 - Plates MK. E2-57 ; D2-57

One-Plate MK. D2-60

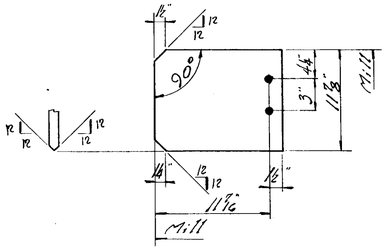

One-Plate MK. D2-73

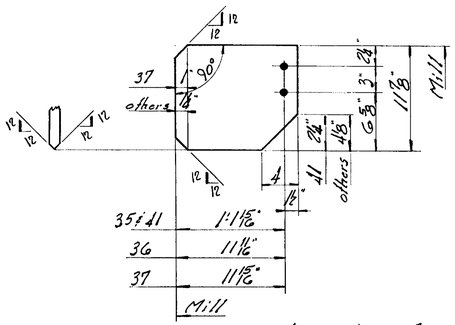

5 - Plates MK. 1/E1-35 ; 1/E2-35 ; 2/D1-35 ; 1/D2-35

4 - Plates MK. E1-36 ; E2-36 ; D1-36 ; D2-36 (1 each)

6 - Plates MK. 1/E1-37 ; 2/E2-37 ; 1/D1-37 ; 2/D2-37

One-Plate MK. D2-41

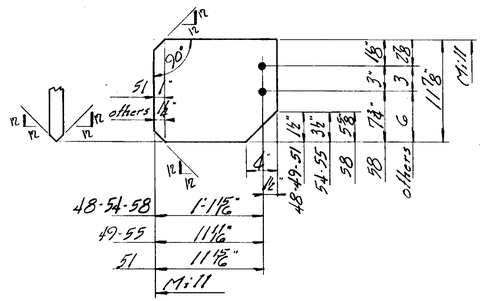

2 - Plates MK. E1-48 ; E2-48 (1 each)

2 - Plates MK. E1-49 ; E2-49 (1 each)

One-Plate MK. E2-51

4 - Plates MK. E1-54 ; E2-54 ; D1-54 ; D2-54 (1 ea.)

4 - Plates MK. E1-55 ; E2-55 ; D1-55 ; D2-55 (1 ea.)

2 - Plates MK. D1-58 ; D2-58 (1 ea.)

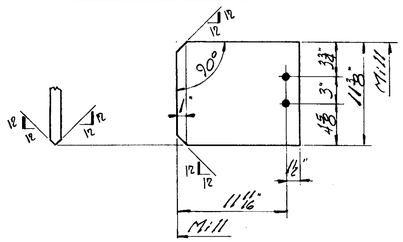

2 - Plates MK. E2-38 ; D2-38 (1 each)

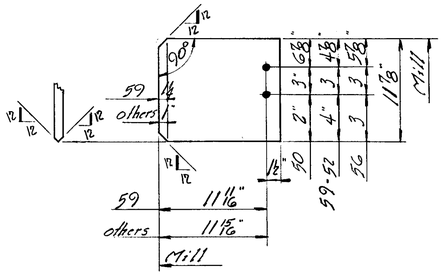

One-Plate MK. E1-50

4 - Plates MK. 1/E2-52 ; 1/D1-52 ; 2/D2-52

6 - Plates MK. 1/E1-56 ; 2/E2-56 ; 1/D1-56 ; 2/D2-56

2 - Plates MK. D1-59 ; D2-59 (1 each)

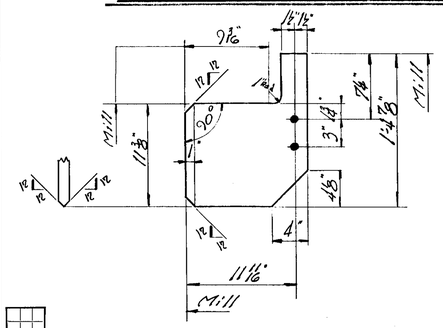

2 - Plates MK. E2-39 ; D2-39 (one each)

WEIGHT	NO. PCS.	ASS'M MK.	SHAPE	LENGTH	REMARKS	ORDERED
	2-Plates MK. E1-32; E2-32 (1 each)					
	4-Plates MK. E1-33; E2-33; D1-33; D2-33 (1 ea.)					
	6-Plates MK. 1/E1-34; 2/E2-34; 1/D1-34; 2/D2-34					
79	2		PS 11 7/8" × 3/8"	1 3 7/16	M.2 edges for 38	Stk cut 12'-3/8"-1-3 7/8
135	4		PS do	1 1 3/16	M.2 edges for 33	Stk cut 12'-3/8"-1-1 3/8
207	6		PS do	1 1 3/16	M.2 edges for 32	Stk cut 12'-3/8"-1-1 3/8
	5-Plates MK. E1-35; E2-35; D1-35; D2-35					
	4-Plates MK. E1-36; E2-36; D1-36; D2-36 (1 each)					
	6-Plates MK. 1/E1-37; 2/E2-37; 1/D1-37; 2/D2-37					
	One-Plate MK. D2-41					
337	6		PS 11 7/8" × 3/8"	1 3 7/16	M.2 edges for 35; 35; 1 for 41	Stk cut 12'-3/8"-1-3 7/8
135	4		PS do	1 1 3/16	M.2 edges for 36	Stk cut 12'-3/8"-1-1 3/8
207	6		PS do	1 1 3/16	M.2 edges for 37	Stk cut 12'-3/8"-1-1 3/8
	2-Plates MK. E2-38; D2-38 (1 ea.)					
65	2		PS 11 3/8" × 3/8"	1 1 3/16	M.2 edges	Stk cut 12'-3/8"-1-1 3/8
	2-Plates MK. E2-39; D2-39 (1 ea.)					
96	2		PS 13 3/16" × 3/8"	1 4 7/8	M.2 edges	Stk cut 13 3/8"-3/8"-1-4 7/8
	One-Plate MK. D2-40					
56	One		R 15 7/16" × 3/8"	1 4 7/8	M.2 edges	Stk cut 15 3/8"-3/8"-1-4 7/8
	2-Plates MK. E1-48; E2-48 (1 ea.)					
	2-Plates MK. E1-49; E2-49 (1 ea.)					
	One-Plate MK. E2-51					
	4-Plates MK. E1-54; E2-54; D1-54; D2-54 (1 ea.)					
	4-Plates MK. E1-55; E2-55; D1-55; D2-55 (1 ea.)					
	2-Plates MK. D1-58; D2-58 (1 ea.)					
317	8		PS 11 7/8" × 3/8"	1 3 7/16	M.2 edges 2-48; 4-54; 2-58	Stk cut 12'-3/8"-1-3 7/8
203	6		PS do	1 1 3/16	M.2 edges 2-49; 4-55	Stk cut 12'-3/8"-1-1 3/8
34	One		R do	1 1 3/16	M.2 edges for 51	Stk cut 12'-3/8"-1-1 3/8
	One-Plate MK. E1-50					
	4-Plates MK. 1/E2-52; 1/D1-52; 2/D2-52					
	6-Plates MK. 1/E1-56; 2/E2-56; 1/D1-56; 2/D2-56					
	2-Plates MK. D1-59; D2-59					
68	2		PS 11 7/8" × 3/8"	1 1 3/16	M.2 edges for 59	Stk cut 12'-3/8"-1-1 3/8
378	11		PS do	1 1 3/16	M.2 edges for 50; 4-52; 6-56	Stk cut 12'-3/8"-1-1 3/8
	One-Plate MK. E2-53					
	2-Plates MK. E2-57; D2-57 (1 ea.)					
	One-Plate MK. D2-60					
134	4		PS 11 3/8" × 3/8"	1 1 3/16	M.2 edges for 53; 2-57; 1-60	Stk cut 12'-3/8"-1-1 3/8
	One-Plate MK. D2-73					
33	One		R 11 7/8" × 3/8"	1 0 15/16	M.2 edges	Stk cut 12'-3/8"-1-1 3/8

TOTAL	ORD.	PLATES	STD.	BOLT	RIV.	PAINT
2381		2381				

~~RIVETS~~:-

OPEN HOLES:- 13/16" ø

DATE	REVISION	BY	CH'K'D

Lehigh Structural Steel Co.
ALLENTOWN, PA.

HARTFORD PUBLIC LIBRARY
HARTFORD, CONN.
VIERENDEEL TRUSSES "D" & "E"

IN CHARGE OF C.F. DATE
DRAWN BY HD DATE 18 Oct 54
CHECKED BY F.F. DATE 11-11-54
SCALE

CONTRACT NUMBER 4089
SHEET NUMBER 11

DATE CHKT. CHK.

Lot "2"