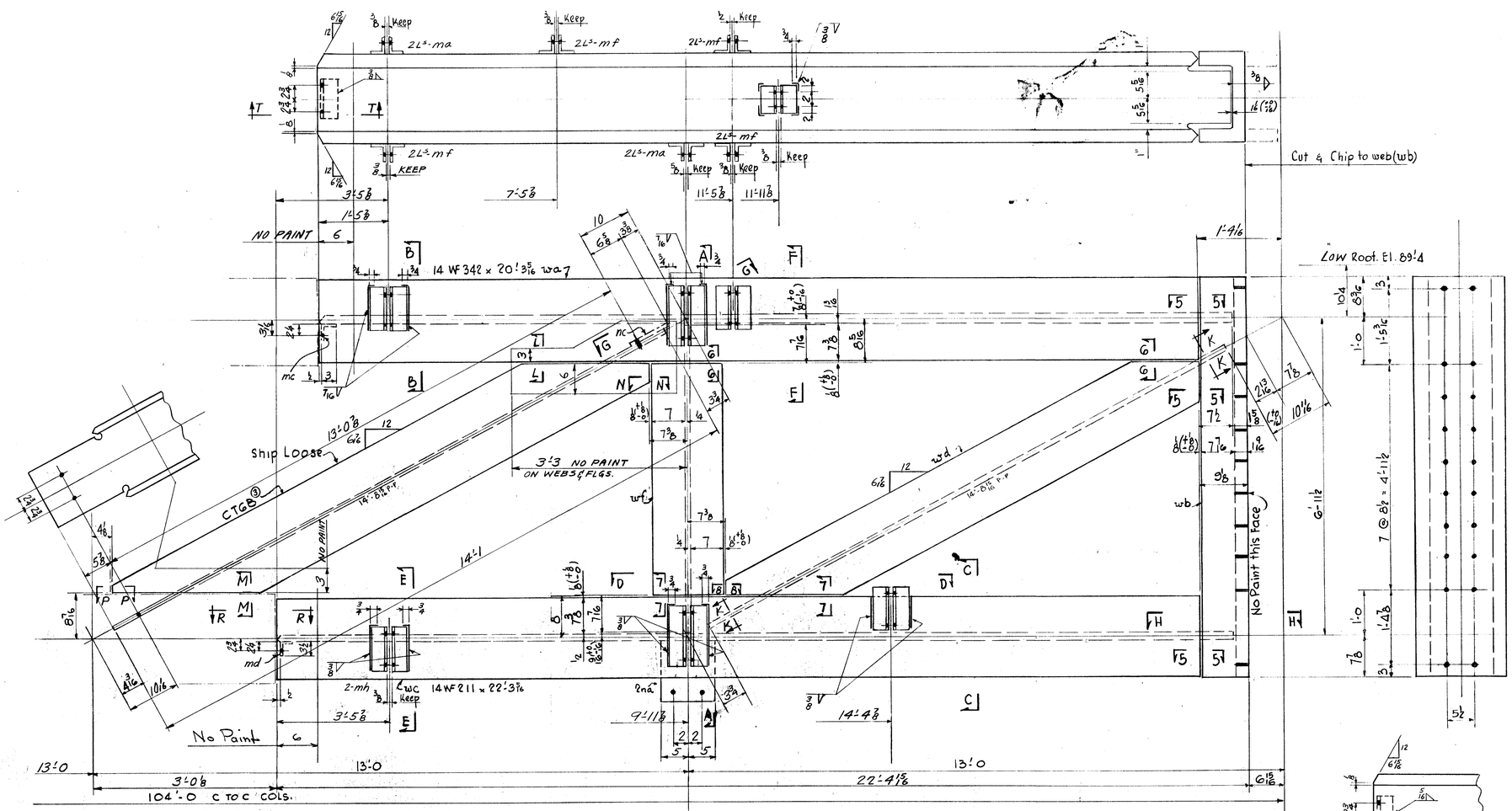

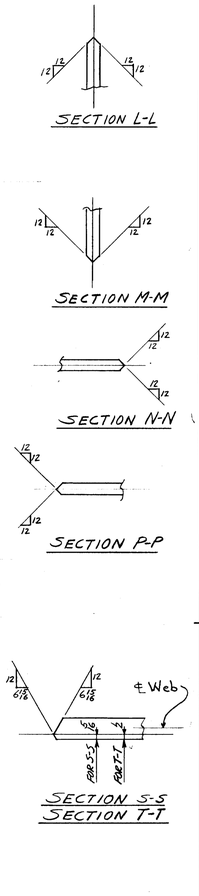

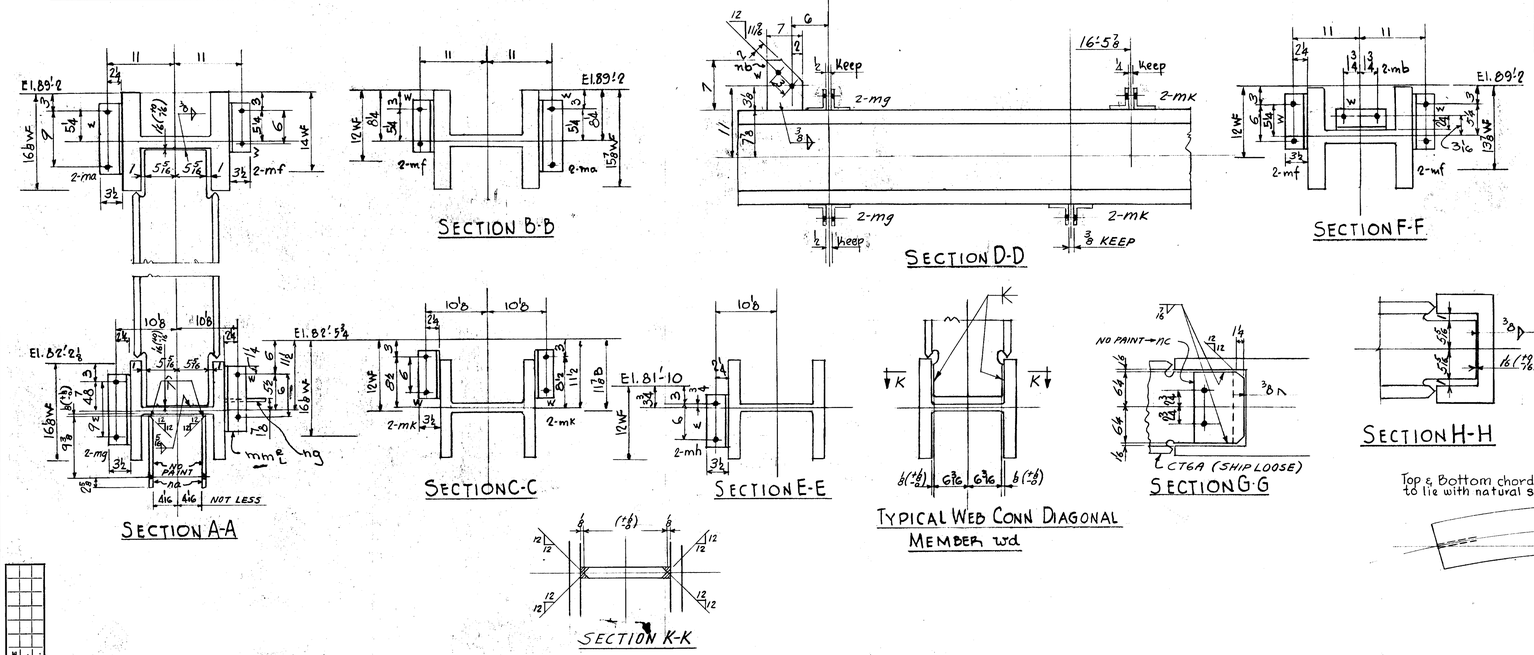

Flanges to be parallel and 90° to web

ONE TRUSS MK CTGS③
ONE PIECE MK CTGB③

WEIGHT	NO. PCS.	ASS'M MK.	SHAPE	LENGTH	REMARKS	ORDERED
		ONE	TRUSS MK C TGS ③			
7798	ONE	wa	14 WF 342	20 3 5/16		20'-5½
2859	ONE	wb	14 WF 342	8 3 1/16		16'-8¼
4701	ONE	wc	14 WF 211	22 3 7/16		22'-6
3087	ONE	wd	14 WF 228	13 6½		28'-8¼
650	ONE	wf	14 WF 95	6 10 1/16		13'-11¼
39	4	ma	L 3½ x 3 x ½	0 11½		
8	2	mb	L 3½ x 3 x 3/8	0 6		
7	ONE	mc	L 3½ x 3 x ½	0 8		
7	ONE	md	L 3½ x 3 x ½	0 8		
58	8	mf	L 3½ x 3 x ½	0 8½		
39	2	mg	L do.	0 11½		
14	2	mh	L do.	0 8½		
29	4	mk	L do.	0 8½		
	2	mm	L do.	0 11½		
35	2	na	PL 10 x ½	1 0		
7	ONE	nb	PL 7 x ½	0 7		
14	ONE	nc	PL 8 x ½	1 0½		
97	PAINT					
19429	TOTAL					
1999	ONE	CTGB③	14 WF 142	14 1		29'-6¼
10	PAINT					
2009	TOTAL					

TOTAL	ORD.	PLATES	STD.	BOLT	RIV.	PAINT
21438	2107	56	201			107

NOTES:-
For typical detail for burning webs of all truss members see sheet 7
For SECTIONS 5-5, 6-6, 7-7, 8-8, SEE SHEET 7.

Top & Bottom chord members are to lie with natural sweep thus:-

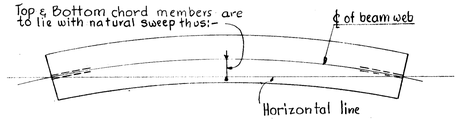

OPEN HOLES:- 13/16 ϕ

DATE	REVISION	BY	CH'K'D
1-31-55	Changed 215 mg to 215 mm PL		F.F.

Lehigh Structural Steel Co.
ALLENTOWN, PA.

TRUSS-T6
HARTFORD PUBLIC LIBRARY
HARTFORD CONN.

IN CHARGE OF FISHER
DRAWN BY A. MacT. DATE 11-5-54
CHECKED BY T.F. DATE 11-6-54
SCALE
CONTRACT NUMBER 4088
SHEET NUMBER 17

LOT #7 WELD