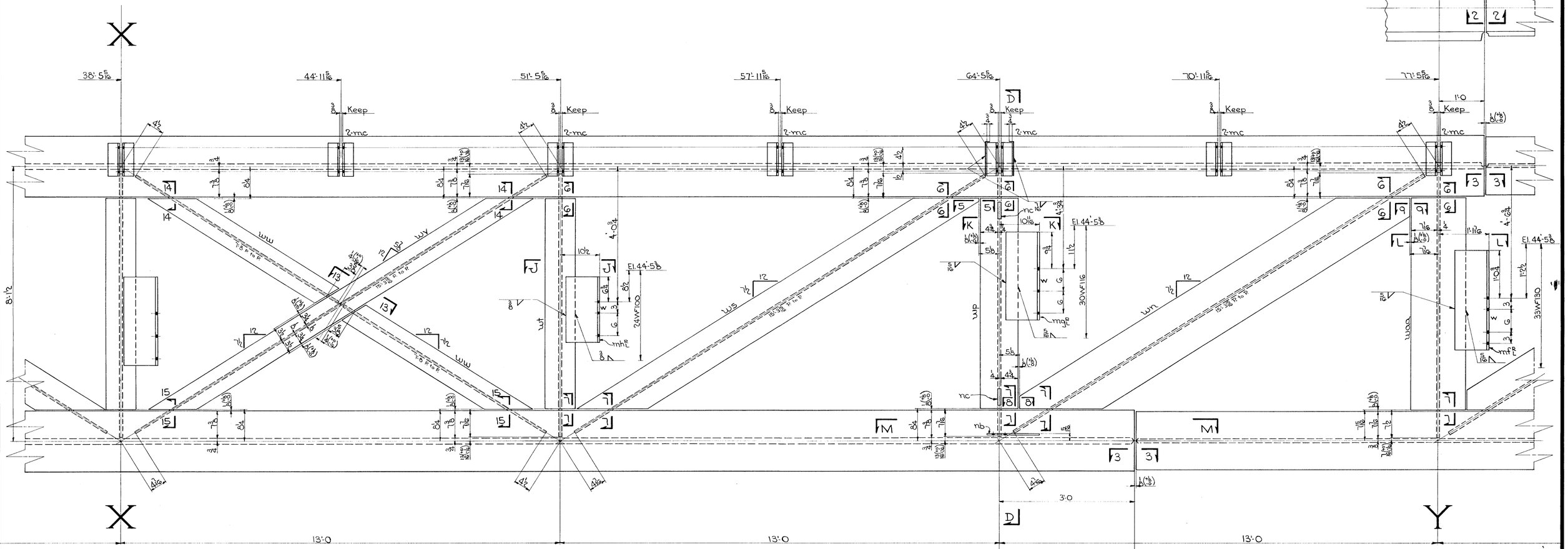

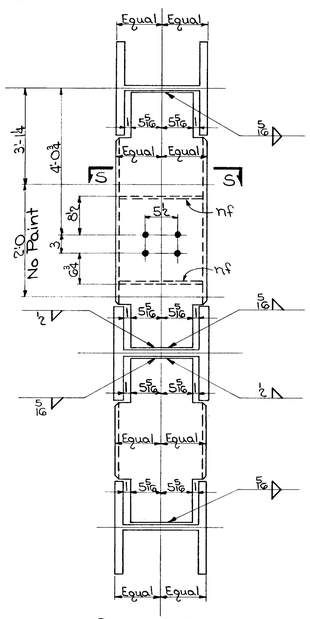

SECTION R-R

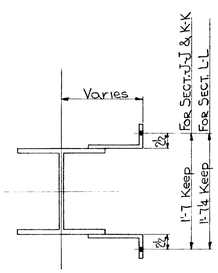

SECTION J-J
do K-K
do L-L

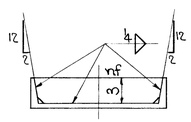

SECTION S-S

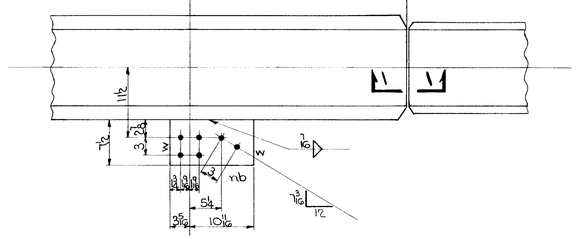

SECTION M-M

NOTES:-
For typical detail for burning webs of all truss members see sheet 7.
For SECTIONS 1-1, 3-3, 5-5, 6-6, 7-7, 8-8, 9-9, 13-13 14-14 & 15-15 see sheet 7.

OPEN HOLES:- 13/16"

WORK THIS SHEET IN CONJUNCTION WITH SHEET 4 & 6

DATE	REVISION	BY	CH'K'D
11-19-54	Revised Weld Sections		F.F.
11-11-54	Approval Change	F.F.	R.C.C.

Lehigh Structural Steel Co.
ALLENTOWN, PA.

TRUSS - T4

HARTFORD PUBLIC LIBRARY
HARTFORD, CONN.

IN CHARGE OF C.L.F.	DATE	CONTRACT NUMBER	4088
DRAWN BY R.C.C.	DATE 10-7-54		
CHECKED BY F.F.	DATE 10-12-54	SHEET NUMBER	5
SCALE			

Lot 1

WELD