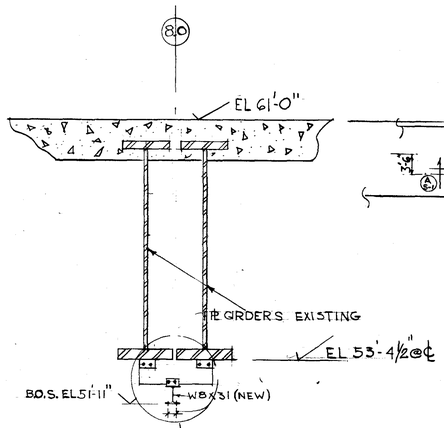

SECTION B-B SCALE: ½"=1FT

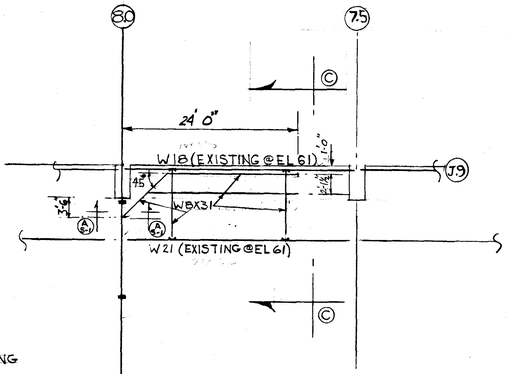

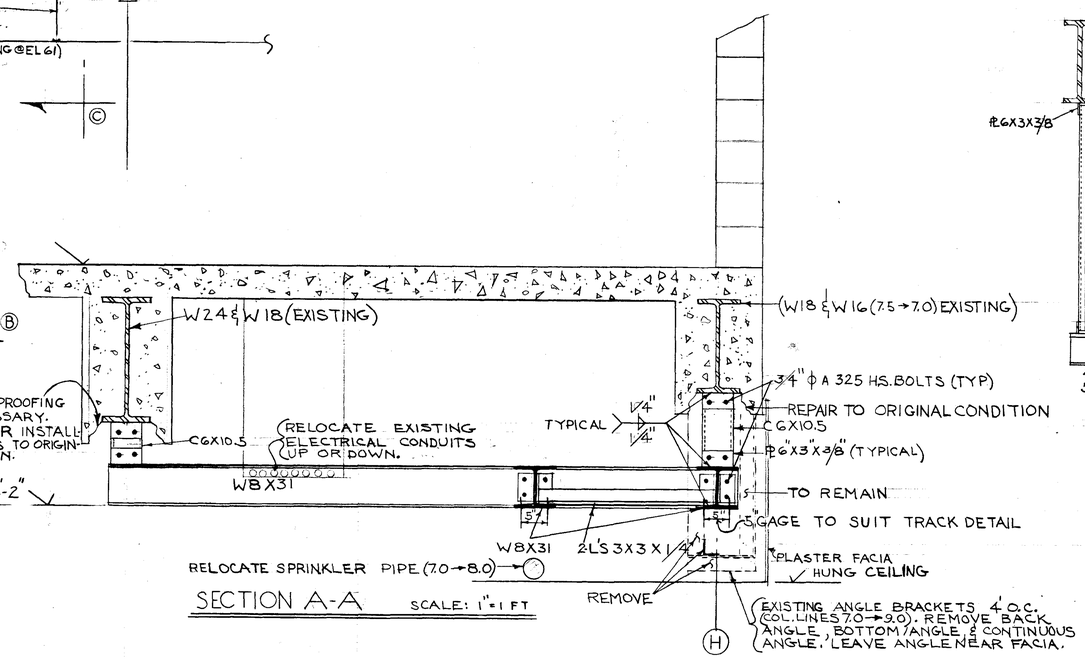

SECTION A-A SCALE: 1"=1 FT

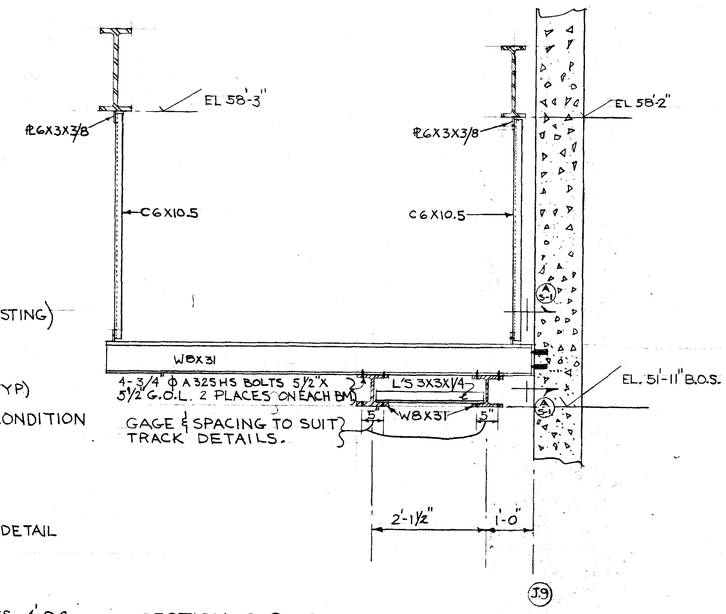

SECTION C-C SCALE ¾"=1FT

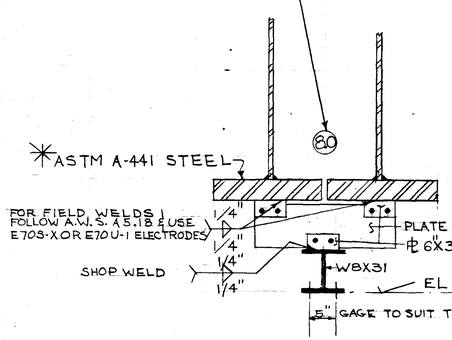

HANGER DETAIL SCALE: 1"=1FT

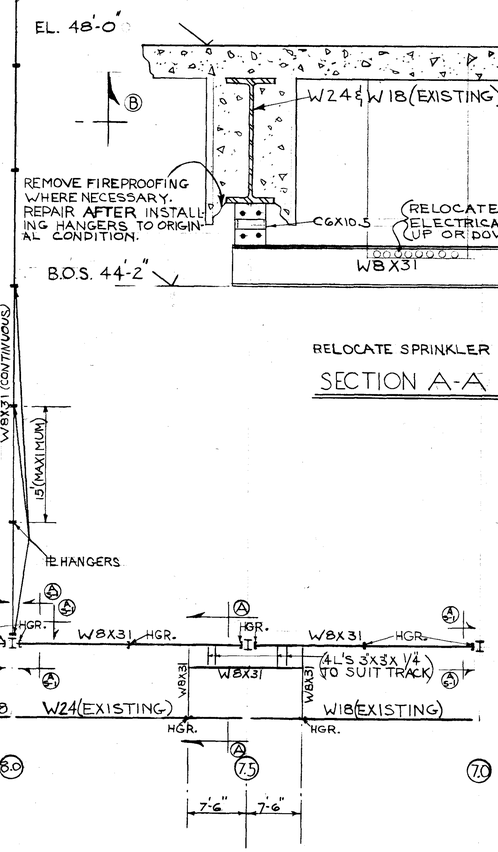

ASSEMBLY HALL SCALE 1/8"=1FT

FOR GEN. NOTES SEE DWG S-1

VERIFY EXISTING CONDITIONS AND DIMENSIONS

CITY OF WATERTOWN CONNECTICUT DEPARTMENT OF PUBLIC WORKS BUREAU OF WELFARE BUILDINGS			
STRUCTURAL DWG. NEW INSTALLATION OF MOVABLE WALLS LVL 31 ASSEMBLY HALL			
Paul Anthony Wacker / Walter A. Rand / George E. Nappier			
PDA	SCALE NOTED	DRAWING NO. 010609 E DATE 5-15-77	S-2