NOTE
EYE HOOK TO BE TURNED
PARALLEL TO 6" CHANNEL

NOTE
ALL FIELD CONNECTIONS
TO BE BOLTED.

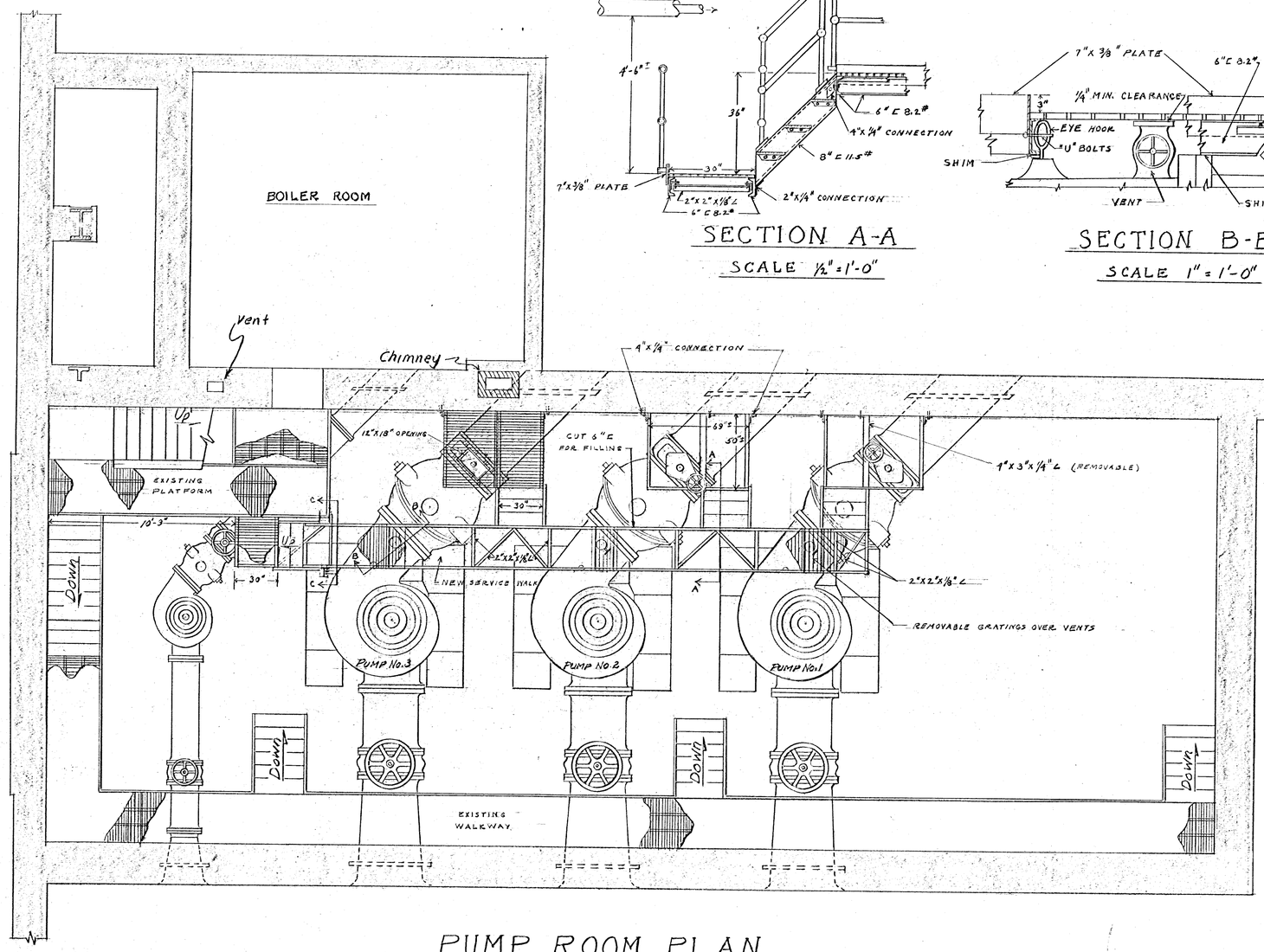

PUMP ROOM PLAN

SCALE 1/4" = 1'-0"

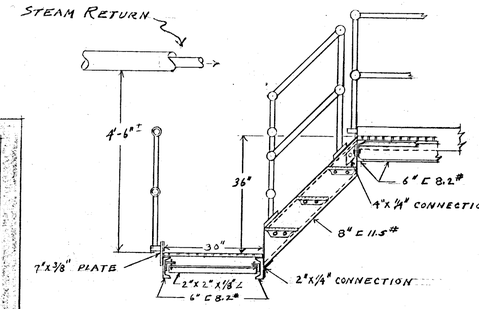

SECTION A-A

SCALE 1/2" = 1'-0"

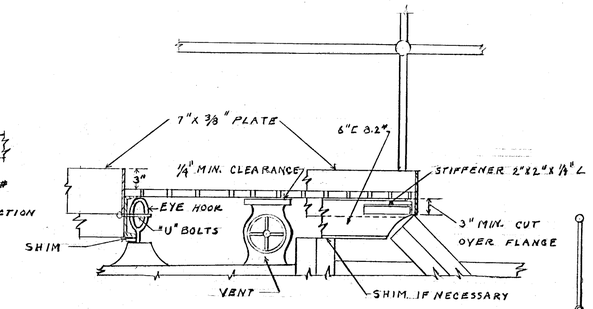

SECTION B-B

SCALE 1" = 1'-0"

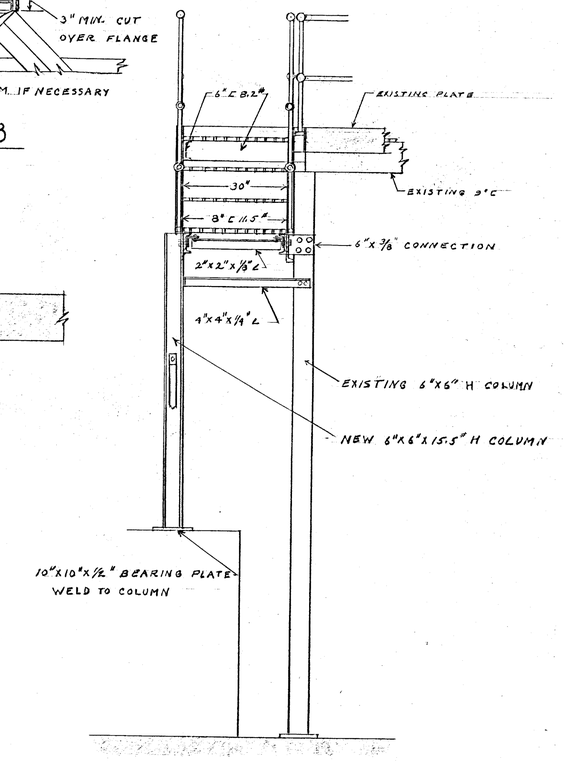

SECTION C-C

SCALE 1/2" = 1'-0"

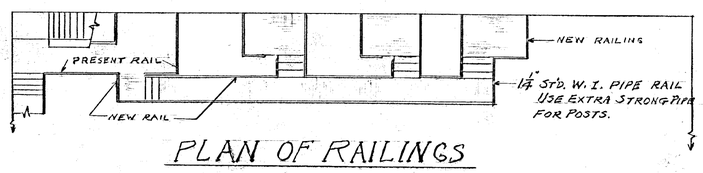

PLAN OF RAILINGS

SCALE 1/8" = 1'-0"

VERIFY EXISTING CONDITIONS AND DIMENSIONS AT BUILDING

SHEET 1 OF 4 SHEETS

CITY OF HARTFORD, CONNECTICUT
DEPARTMENT OF ENGINEERING

PLAN · AND · DETAILS OF · SERVICE · WALK

NORTH · MEADOWS · PUMP · STATION

SUBMITTED	RECOMMENDED	APPROVED
Daniel L. Farrell, DIVISION ENGINEER	Winfield W. Dailey, ASST. CITY ENG.	Edward Filter, CITY ENGINEER

DESIGN _____ DRAWN R.G.B. TRACED _____ CHECK A.J.L.

BOOK NO. 09186-A

DATE MARCH 18, 1952.