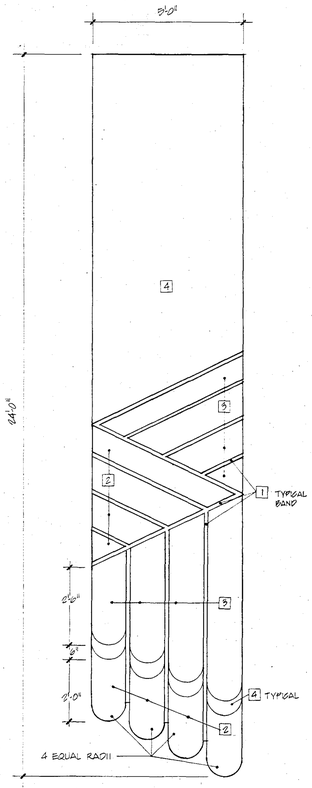

1 / A-14 TYPICAL FABRIC BANNER ABOVE STAIRS
(4 BANNERS REQUIRED-SEE SPECS. SEC. 12392)

SCALE: 1/2"=1'-0"

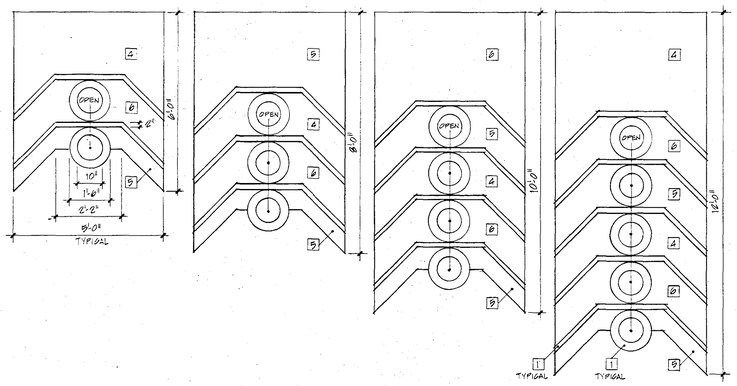

2 / A-14 FABRIC BANNERS ABOVE ESCALATOR
(1 BANNER REQUIRED IN EACH OF 4 SIZES - SEE SPECS., SEC. 12392)

SCALE: 1/8"=1'-0"

NOTE! ALL CUTOUTS, BRACKETS, HANGERS, FRAMING ETC. TO BE BY THIS CONTRACTOR.

COLOR KEY	
1 – MATCH CENTRAL SHIPPEE	#506 BEIGE
2 – MATCH CENTRAL SHIPPEE	#408 SPRING GREEN
3 – MATCH CENTRAL SHIPPEE	#288 KELLY GREEN
4 – MATCH CENTRAL SHIPPEE	#340 TANGERINE
5 – MATCH CENTRAL SHIPPEE	#282 APRICOT
6 – MATCH CENTRAL SHIPPEE	#416 CARROT

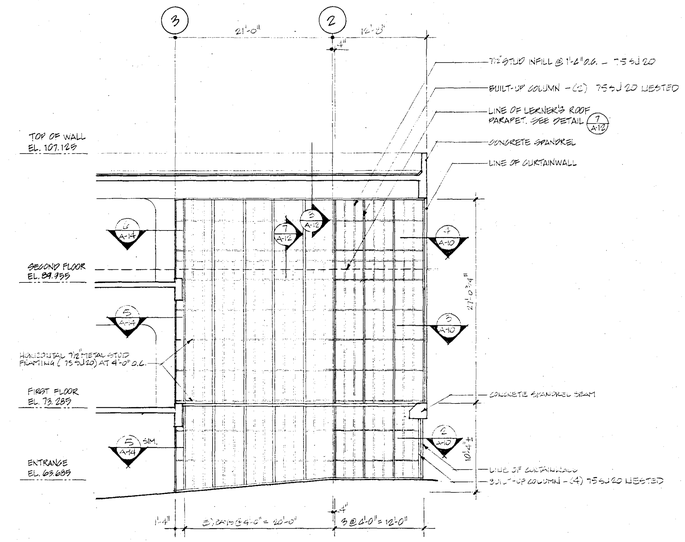

3 / A-14 PARTIAL FRAMING ELEVATION AT SOUTH WALL, WEST END

SCALE: 1/8"=1'-0"

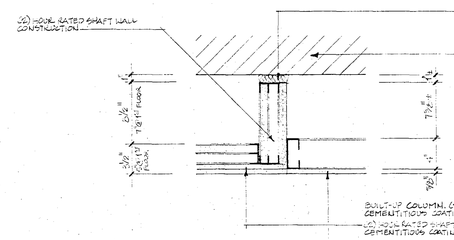

4 / A-14 DETAIL
SCALE 1 1/2"=1'-0"

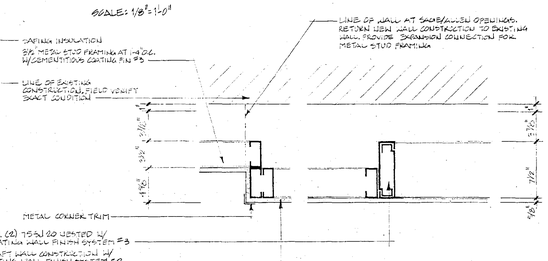

5 / A-14 DETAIL
SCALE 1 1/2"=1'-0"

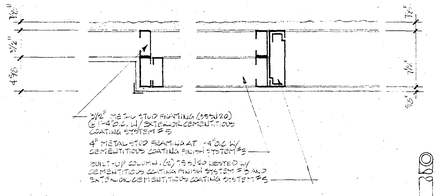

6 / A-14 DETAIL
SCALE 1 1/2"=1'-0"

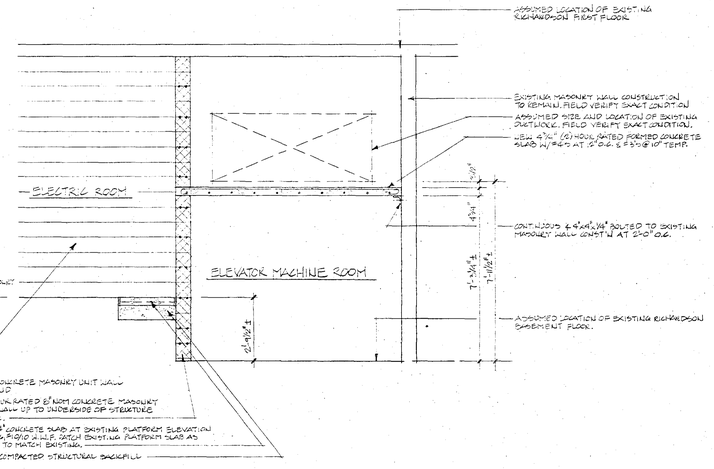

7 / A-14 PARTIAL SECTION AT SUB-BASEMENT
SCALE 3/8"=1'-0"

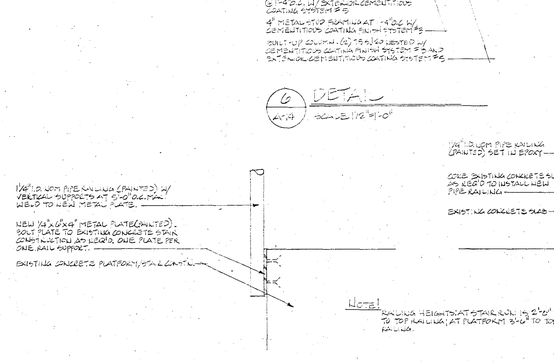

NOTE! RAILING HEIGHT AT STAIR RUN IS 2'-6" TO TOP RAILING; AT PLATFORM 3'-0" TO TOP RAILING.

8 / A-14 RAILING SUPPORT DETAIL
SCALE 1 1/2"=1'-0"

9 / A-14 DETAIL AT RAILING END
SCALE 1 1/2"=1'-0"

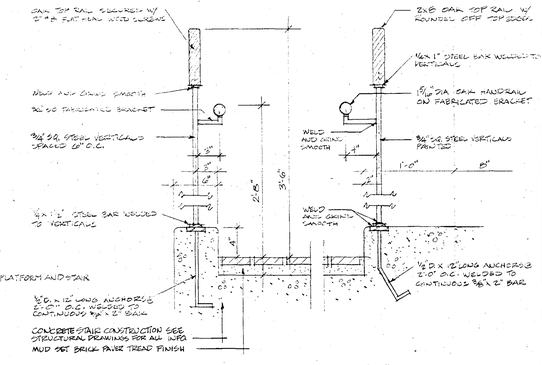

10 / A-14 DETAIL (BID ALT. GC-2)
SCALE: 1 1/2"=1'-0"

11 / A-14 DETAIL (BID ALT. GC-2)
SCALE 1 1/2"=1'-0"

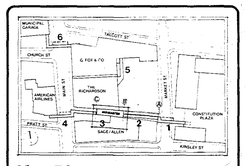

Key Plan

Numbers Indicate Walk System Segments

N

Issue Dates Prior to Full Release

Date of issue	Is this identical to prints of last issue Yes	No	Issued to	Use restrictions

Use and Interpretation of This Drawing

1. Except as may be otherwise shown or noted, work not completely definitively dimensioned or specified shall be similar to work that is so dimensioned or specified under identical or the same conditions, or work that is shown similarly but more completely elsewhere on this or other Drawings furnished for this Project by the Architect.

2. AFTER EXECUTION OF THE CONSTRUCTION CONTRACT applicable to work indicated hereon, except as may be otherwise shown or noted, each issue of this Drawing is intended as a "Written Interpretation of the Contract Documents", or as an "Order for a Minor Change in the Work" as defined in the Construction Contract, and this Drawing is therefore of conform. Without further action this Drawing will become a Contract Document unless a claim is made by written notice to the Architect within the period established by the Construction Contract, which is 10 days unless otherwise agreed to a Contract Document amending the General Conditions of the Contract for Construction, AIA Document A201, Paragraph: General Conditions Paragraphs 2.2.5, 2.2.6, 2.2.7, 2.2.8 and 2.2.9.

3. THE RELEASE STATUS OF THIS DRAWING is indicated by the statement following the "checkbox" box below in which the Architect has placed an "X" or a "✓".

☐ "PROGRESS PRINT" - NO PART OF THIS DRAWING IS RELEASED BY ARCHITECT FOR CONSTRUCTION PURPOSES.

(This above box clause are retained by the expression below in this block of a dated signature of a member of the Architect's staff.).

☐ "PARTIAL RELEASE" - ONLY TO THE EXTENT NOTED HEREON, PARTS OF THIS DRAWING ARE RELEASED BY ARCHITECT FOR CONSTRUCTION PURPOSES.

By. . . . . , 19__
(Date of Final Partial Release)

☒ "FULL RELEASE" - THIS DRAWING HEREBY IS FULLY RELEASED BY THE ARCHITECT FOR PURPOSES OF CONSTRUCTION OF THIS PROJECT ONLY.

By. . . . . OCTOBER 15, 19 8

Revisions after Partial or Full Release

Mark	Date	Nature of revisions	Quantity so marked

Construction Manager
Cronin Construction Services Corporation
Box 14510 Barry Square Station
Hartford, Ct. 06114 203/278-1540

Mechanical Engineers
Koton, Allen & Associates, Inc.
510 Cottage Grove Road
Bloomfield, Ct. 06002 203/243-1701

Landscape Architect
Johnson & Dee
Brownstone Court
Avon, Ct. 06001 203/678-0669

PLANS PREPARED BY
ARCHITECTS
IRWIN JOSEPH HIRSCH & ASSOCIATES, INC.
291 FARMINGTON AVE. / FARMINGTON, CT. 06032
203/677-0273

MISCELLANEOUS DETAILS

Hartford Walk System - Mixmaster

Hartford, Connecticut

Project Number	Drawing Number
IJH-210-II	A-14
Scale: AS NOTED	