CORPS OF ENGINEERS — U. S. ARMY

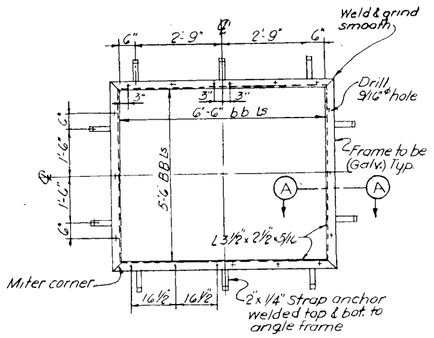

FRAME F-1
SCALE 1/2"=1'-0"

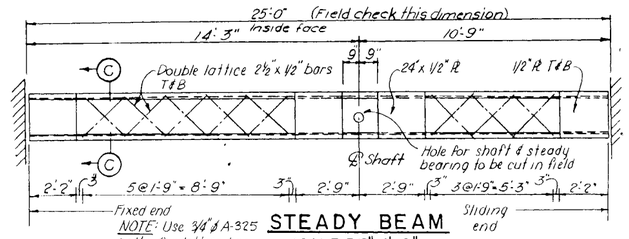

NOTE: Use 3/4"ø A-325 bolts for lattice bar & plate connections.

STEADY BEAM
SCALE 3/8"=1'-0"

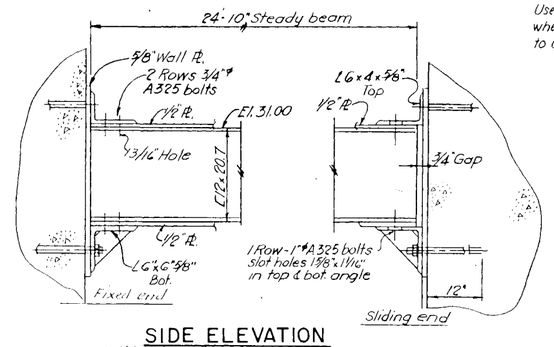

SIDE ELEVATION

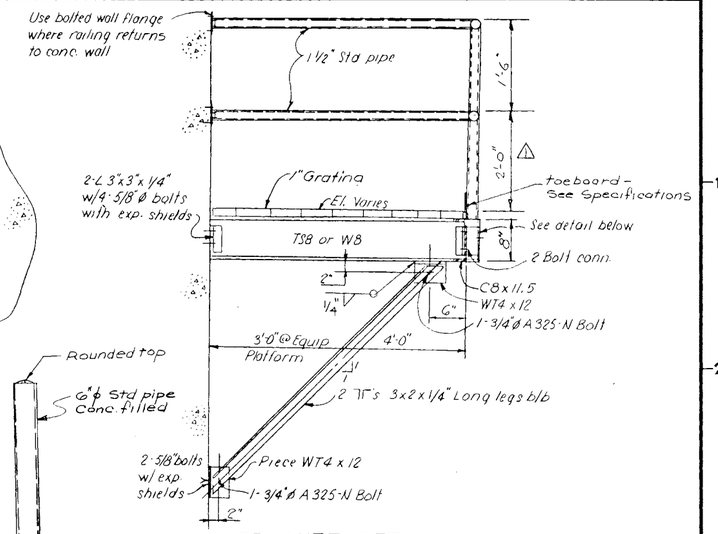

BRACKET DETAIL
SCALE 1" = 1'-0"

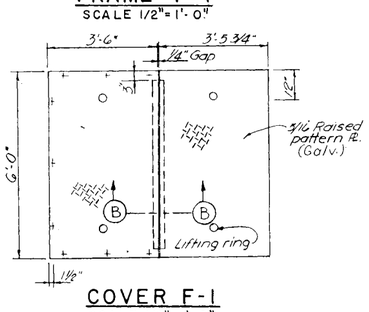

COVER F-1
SCALE 1/2"=1'-0"

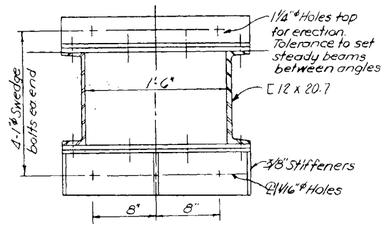

SECTION C-C
SCALE 11/2"=1'-0"

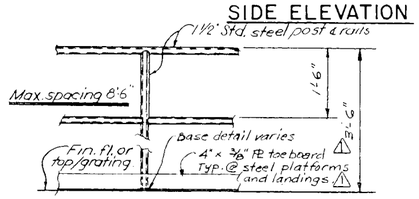

TYPICAL INTERIOR RAIL
SCALE 3/4"=1'-0"

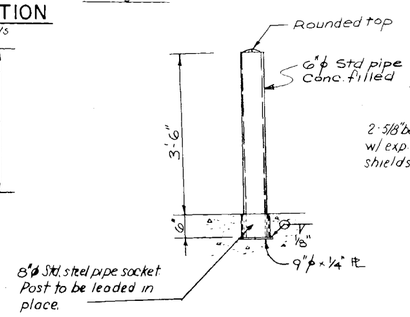

DETAIL E

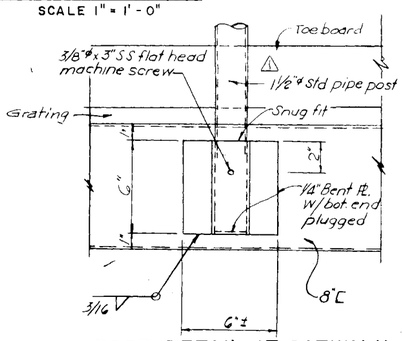

POST DETAIL AT CATWALK
SCALE 3" = 1'-0"

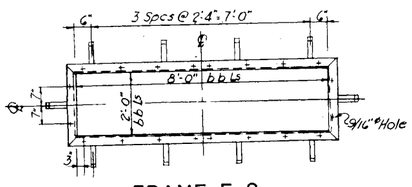

FRAME F-2
SCALE 1/2"=1'-0"

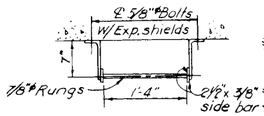

SECTION D-D

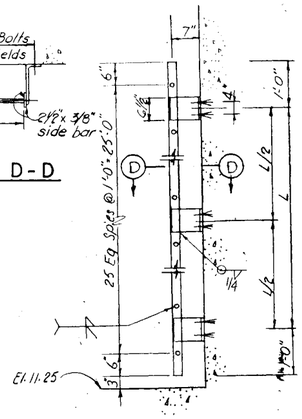

LADDER DETAIL
SCALE 3/4"=1'-0"

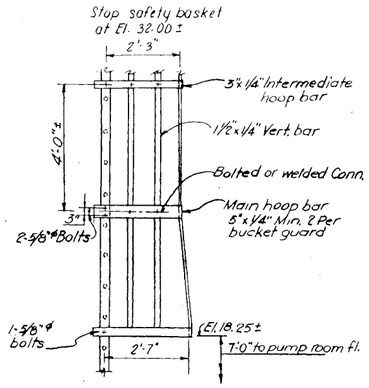

ELEVATION

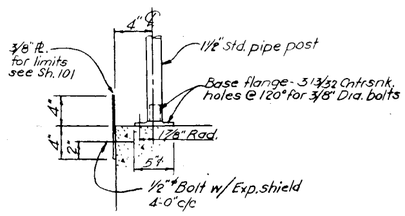

RAILING AND TOEBOARD DETAIL AT EXISTING CONCRETE STAIR
SCALE 1 1/2" = 1'-0"

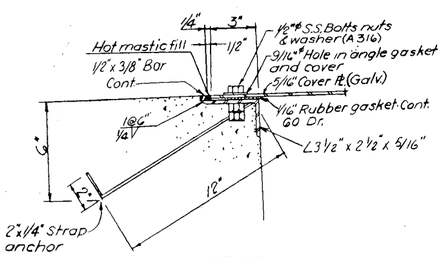

SECTION A-A
SCALE 1/2"=1'-0"

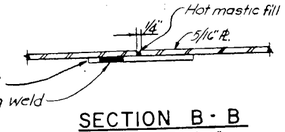

SECTION B-B
SCALE 1/2"=1'-0"

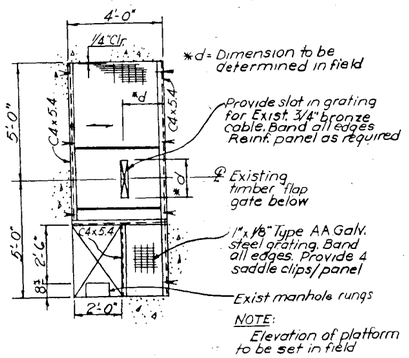

OPERATORS PLATFORM AT HAND HOIST FOR FLAP GATE
SCALE 3/8"=1'-0"

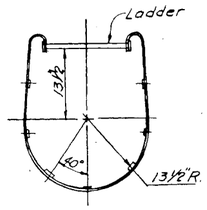

SECTION SAFETY BASKET

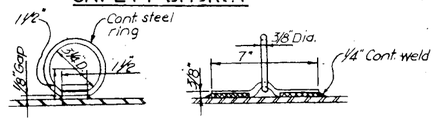

FRONT VIEW — SIDE VIEW

LIFTING RING
SCALE 3" = 1'-0"

GRAPHIC SCALES

3/4" = 1'-0"
1/2" = 1'-0"
3/8" = 1'-0"
1" = 1'-0"
1 1/2" = 1'-0"
3" = 1'-0"

NOTES

1. All steel to be A-36 unless otherwise noted.
2. For finish of interior and exterior misc. metals see specifications.

As Built Drawing
Contract No. DACW 33-76-C-0098

REVISION	DATE	DESCRIPTION	BY
	4-4-83	Final field corrections	
1	0-12-78	Revised height of rails. Toeboard added @ landings	

DEPARTMENT OF THE ARMY
NEW ENGLAND DIVISION
CORPS OF ENGINEERS
WALTHAM, MASS.

DES. BY W.R. | DR. BY A.Z. | CK. BY W.R.
SUBMITTED: CHIEF, STRUCT. SECTION
APPROVAL RECOMMENDED: CHIEF, TECH. ENG. BRANCH
REVIEWED: PROJECT ENGINEER
APPROVAL RECOMMENDED: CHIEF, PROJECT BRANCH

WATER RESOURCES DEVELOPMENT PROJECT
PARK RIVER LOCAL PROTECTION
ARMORY PUMPING STATION
STRUCTURAL
MISCELLANEOUS DETAILS
HARTFORD CONNECTICUT

APPROVED: CHIEF, ENGINEERING DIVISION
DATE MARCH 1976
SCALE AS SHOWN | SPEC. NO. DACW33-76-B-0040
DRAWING NUMBER PAR - 1
SHEET 102