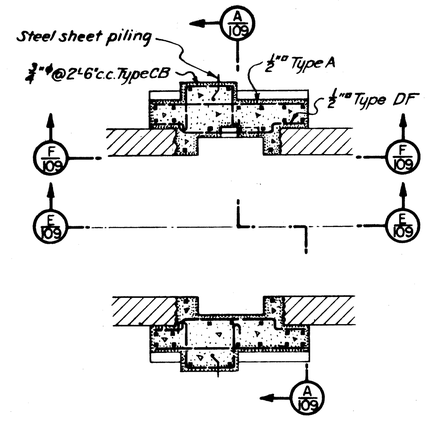

SECTION B/109

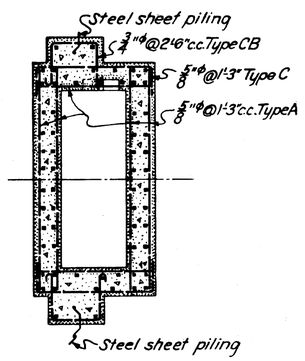

SECTION C/109

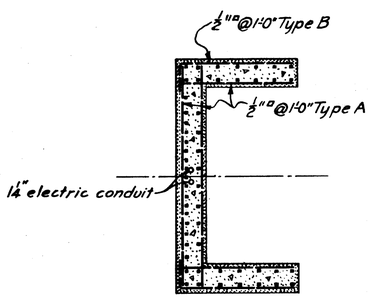

SECTION D/109

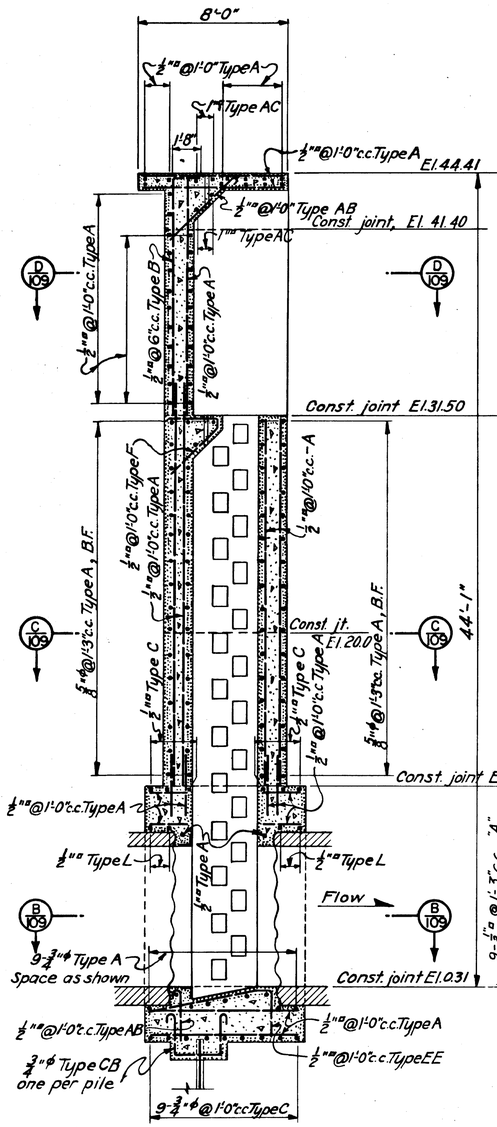

SECTION E/109

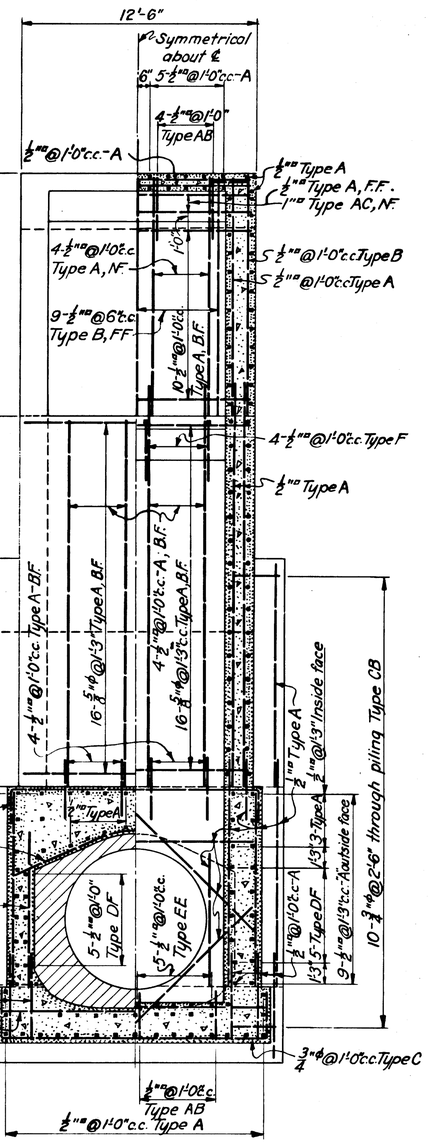

SECTION A/109

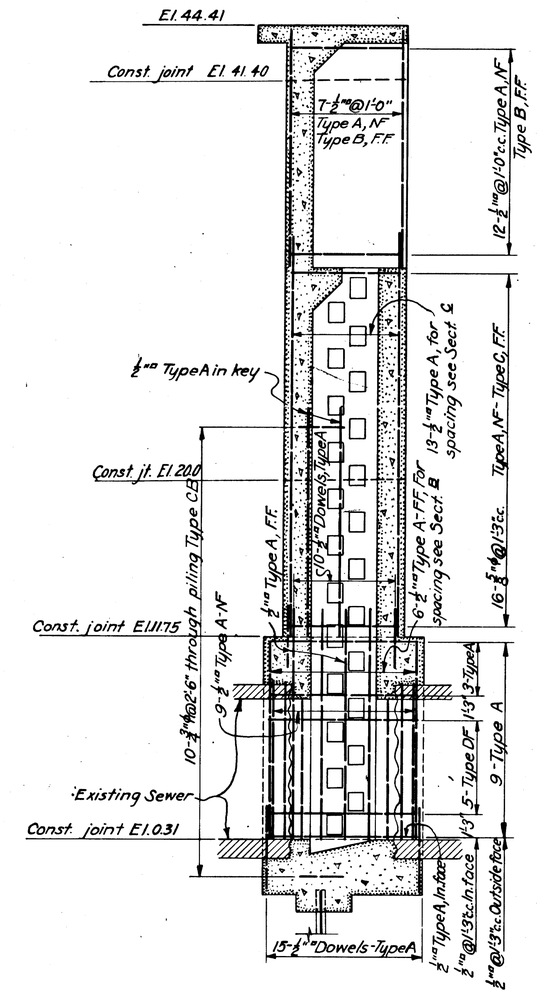

SECTION F/109

NOTES

For concrete details see Sheet No. 36
For general notes see Sheet No. 107

KEY	DATE	REVISION (Indicated by Δ)	REV. BY	CK. BY	AP. BY
	12-31-45	As built revisions			

CONNECTICUT RIVER FLOOD CONTROL

HARTFORD DIKE

RIVERFRONT, MORGAN ST. TO STA. 96+73

POTTER STREET GATE STRUCTURE

STEEL REINFORCEMENT

CONNECTICUT RIVER — CONNECTICUT

IN 135 SHEETS — SCALE: 1/4 IN. = 1 FT. (5' 0 5' 10') — SHEET NO. 109

U. S. ENGINEER OFFICE, PROVIDENCE, R.I., MAY 1940

SUBMITTED: SENIOR ENGINEER, HEAD, DESIGN SECTION — APPROVAL RECOMMENDED: PRINCIPAL ENGINEER, CHIEF, F.C. ENGINEERING DIV. — APPROVED: LT. COL., CORPS OF ENGINEERS, DISTRICT ENGINEER

DESIGNED: ASSOC. ENGINEER — DRAWN: R.S.M. TRACED: N.I. CHECKED: — FISCAL YEAR 1940 — FILE NO. CT-4-2569

H1.587b