DIAMETERS
3" CONDUIT = 3.5" O.D.
2" CONDUIT = 2.375" O.D.

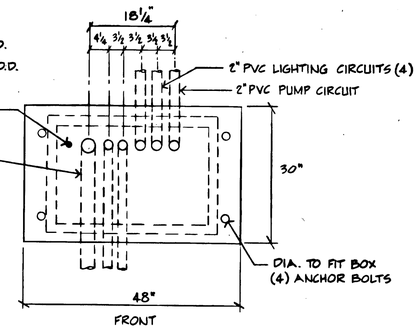

PLAN

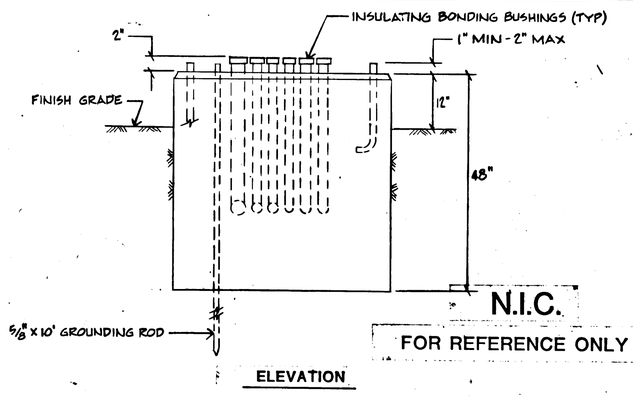

N.I.C.
FOR REFERENCE ONLY

ELEVATION

SERVICE CABINET FOUNDATION

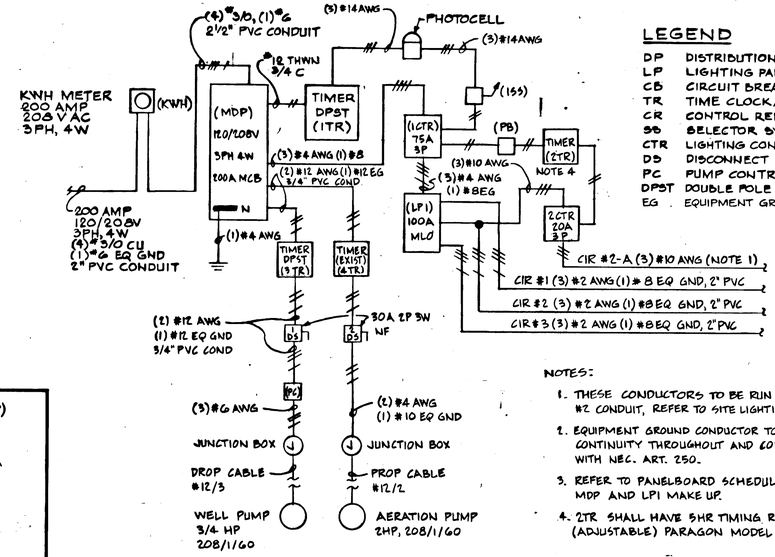

PROPOSED ELECTRICAL SYSTEM SCHEMATIC △1

LEGEND

DP	DISTRIBUTION PANEL
LP	LIGHTING PANEL
CB	CIRCUIT BREAKER
TR	TIME CLOCK/TIMER
CR	CONTROL RELAY
SS	SELECTOR SWITCH
CTR	LIGHTING CONTACTOR
DS	DISCONNECT SWITCH
PC	PUMP CONTROL
DPST	DOUBLE POLE SINGLE THROW
EG	EQUIPMENT GROUND

NOTES:

1. THESE CONDUCTORS TO BE RUN IN CIRCUIT #2 CONDUIT, REFER TO SITE LIGHTING PLAN.
2. EQUIPMENT GROUND CONDUCTOR TO HAVE CONTINUITY THROUGHOUT AND CONFORM WITH NEC. ART. 250.
3. REFER TO PANELBOARD SCHEDULES FOR MDP AND LP1 MAKE UP.
4. 2TR SHALL HAVE 5HR TIMING RANGE (ADJUSTABLE) PARAGON MODEL NO. 500-142-0-120V.

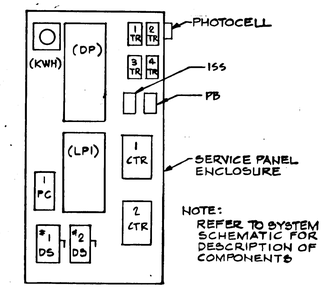

NOTE:
REFER TO SYSTEM SCHEMATIC FOR DESCRIPTION OF COMPONENTS

PROPOSED SERVICE PANEL LAYOUT △1

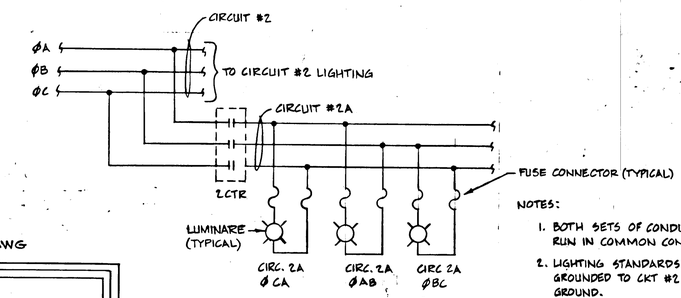

NOTES:

1. BOTH SETS OF CONDUCTORS TO BE RUN IN COMMON CONDUIT.
2. LIGHTING STANDARDS #2A TO BE GROUNDED TO CKT #2 EQUIPMENT GROUND.

CIRCUIT NO. 2 WIRING SCHEMATIC △1

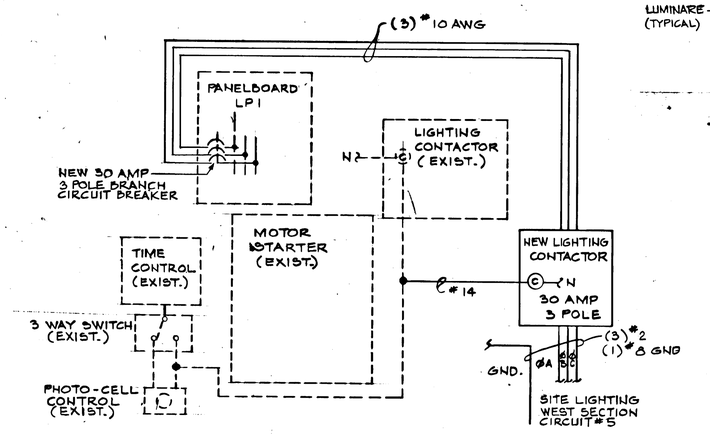

SERVICE PANEL MODIFICATION

REV	DATE	DESCRIPTION
△1	11-30-83	CLIENTS REVISIONS

Job No. 48683 AA
File No.

CITY OF HARTFORD
DEPARTMENT OF PUBLIC WORKS
FACILITY SERVICE BUREAU

cahn
CONSULTING ENGINEERS AND PLANNERS
20 Alexander Drive, Wallingford, Ct. 06492

BUSHNELL PARK PATHWAY LIGHTING

ELECTRICAL SCHEMATICS & DETAILS

Designed by: J.E.P.
Drawn by: K.E. MOSKI
Checked by: JAM
Approved by: E.R.O.K.

Scale: Not To Scale
Date: AUG, 1983
Dwg. No. 6 of 8
Dwg. No. 6

SUBMITTED	APPROVED	APPROVED
	CHIEF FAC. BER. BUR.	CITY ENGR.
DRAWN K. Moski	DAYBOOK NO. 010858	
CHECKED E.R.O.K.	DATE 8/26/88	DRAWING NO. E-6
SCALE None		