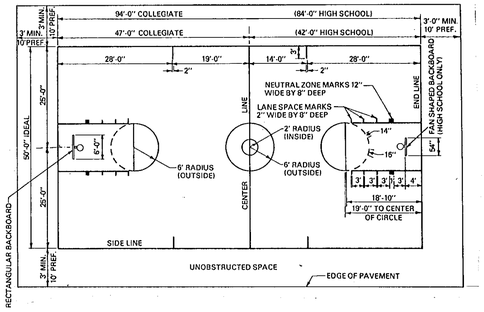

DETAIL OF TYPICAL BASKETBALL COURT
N.T.S.

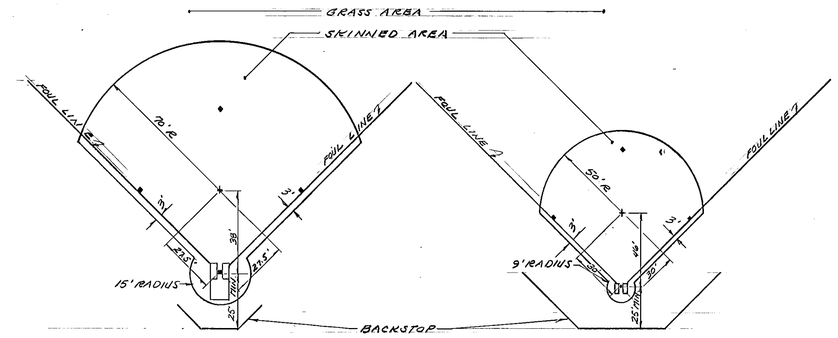

DETAIL OF TYPICAL SOFTBALL FIELD
NTS

DETAIL OF TYPICAL LITTLE LEAGUE FIELD
NTS

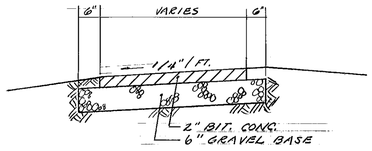

TYPICAL BIT. CONC. WALK
NTS

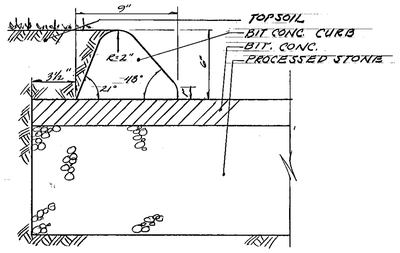

TYPICAL BIT. CONC. LIP CURBING
NTS

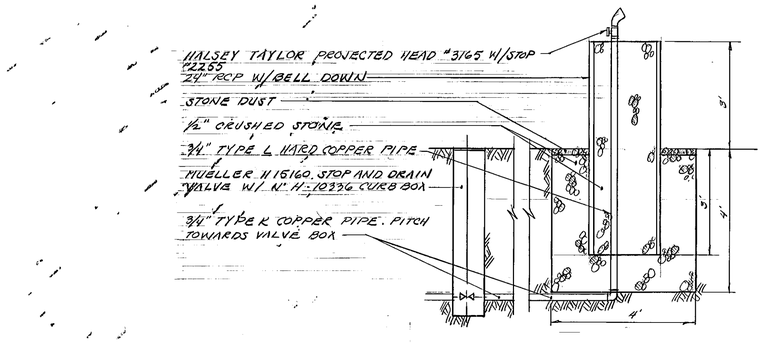

TYPICAL DRINKING FOUNTAIN DETAIL
N.T.S.

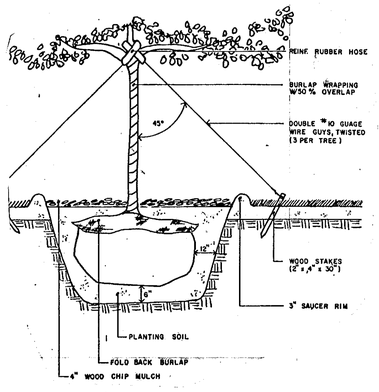

TYPICAL PLANTING DETAIL
N.T.S.

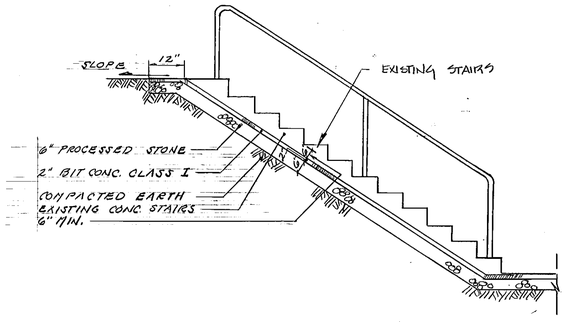

PAVING DETAIL AT HYLAND PARK
N.T.S.

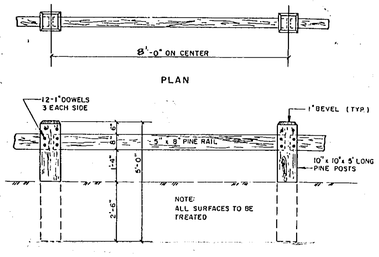

TYPICAL WOOD RAIL FENCE DETAIL
N.T.S.

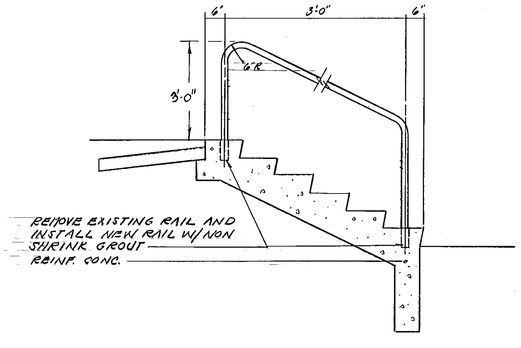

RAILING DETAIL AT RICE HEIGHTS PLAYGROUND
N.T.S.

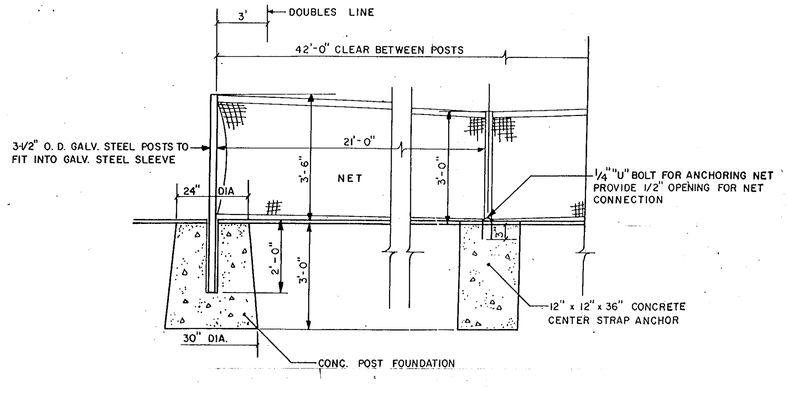

TYPICAL TENNIS NET DETAIL
N.T.S.

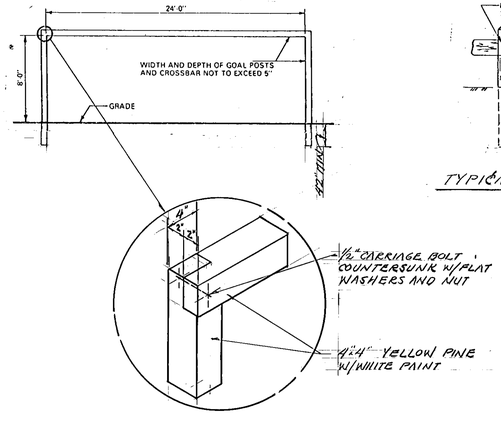

TYPICAL SOCCER GOAL DETAIL
N.T.S.

CITY OF HARTFORD, CONNECTICUT
DEPARTMENT OF PUBLIC WORKS
FACILITIES SERVICES BUREAU

HARTFORD PARKS REHABILITATION II E 83-31
(UPARR PROJECT)
DETAILS

SUBMITTED	APPROVED	APPROVED
JEROME F. SNEE	Paul Martin Tony, CHIEF, FAC. SER. BUR.	Lorette C. Nabbosa, CITY ENGR.
DRAWN [illegible]	DAYBOOK NO. 010858-N	
CHECKED JS	DATE 8-19-83	DRAWING NO. S.D. 10
SCALE NOTED		