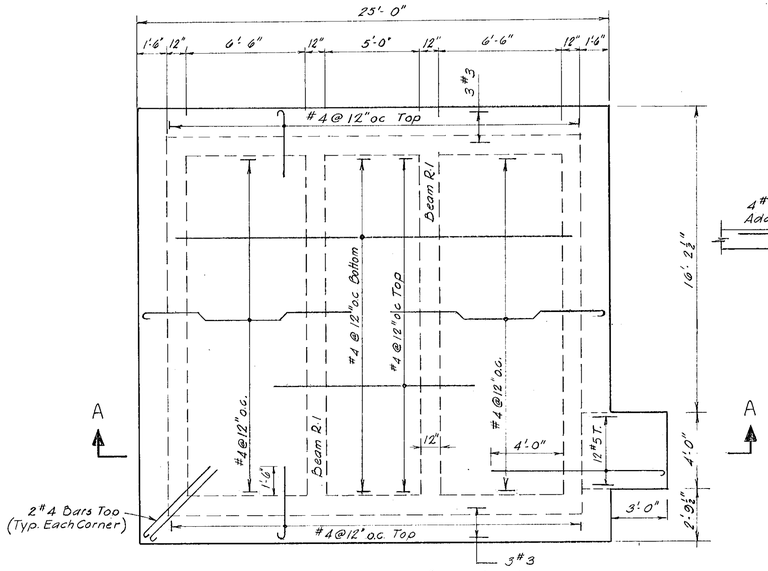

Note: See sh 3 for rail inserts

ROOF SLAB REINFORCEMENT

Scale ¼" = 1'-0"

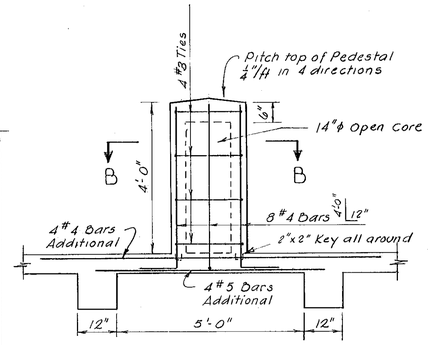

Note: For location see sh 2

ROOF PEDESTAL

Scale ½" = 1'-0"

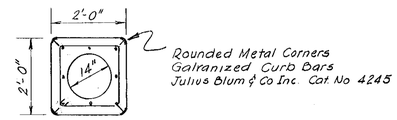

SECTION B-B

Scale ½" = 1'-0"

GENERAL NOTES

1. All concrete to have 3000 pound per square inch compressive strength in 28 days.
2. All reinforcing steel shall be New Billet Steel of intermediate or hard grade conforming to ASTM A-315 revised to date. All Welded Wire Fabric for concrete reinforcing shall conform to ASTM A-185 revised to date.
3. Concrete Protection:
   Footings: Coverage of 3" for Bottom & Sides
   Walls: Coverage of 2" Outside & 1½" Inside
   Columns: Coverage of 2" Outside & 1½" Inside
   Beams: Coverage of 2" Bottom & 1" Top
   Slabs: As shown
4. All Slabs and Beams shall have no horizontal joints. Any stop in concrete work must be made at the center of span with vertical bulkheads.
5. Provide bar supports and spacers in accordance with ACI Detailing Manual.
6. Lap all bars 30 diameters - Minimum lap 1'-0"
7. Unless otherwise shown, reinforce walls below grade with #5 @ 12" oc vertical & #4 @ 12" oc horizontal, each face.
8. Where a construction joint is necessary, vertical or horizontal, a keyway formed with a beveled 2x4 shall be provided and all steel doweled 30 diameters.
9. Horizontal construction joints shall be permitted only as indicated on North-South Section on sheet 4

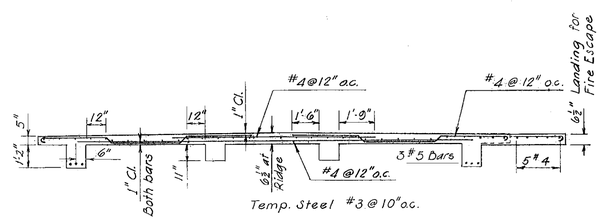

SECTION A-A

Scale ¼" = 1'-0"

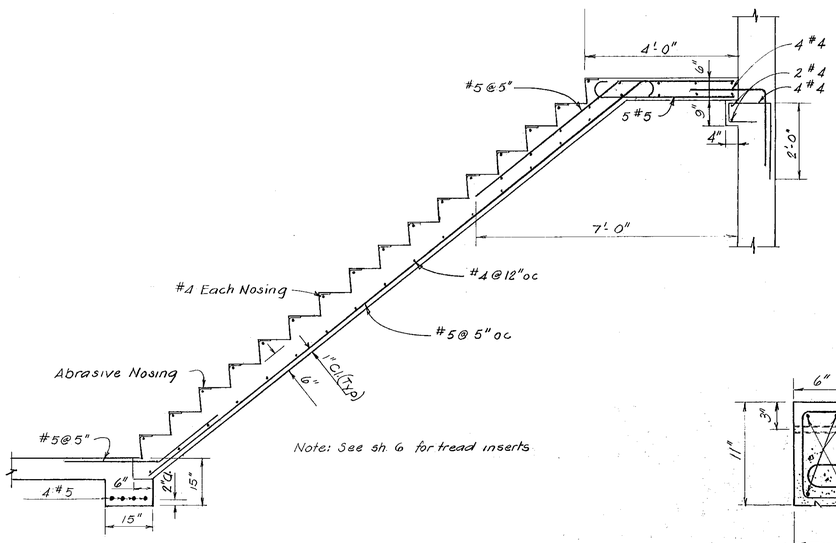

Note: See sh. 6 for tread inserts

TYPICAL STAIR REINFORCEMENT

Scale ½" = 1'-0"

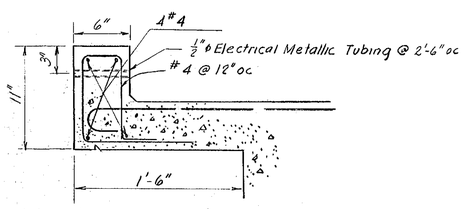

DETAIL OF OVERHANG

Scale 1½" = 1'-0"

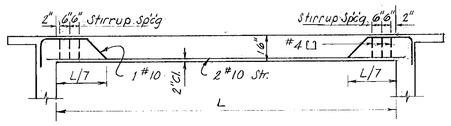

BEAM R-1

Scale ¼" = 1'-0"

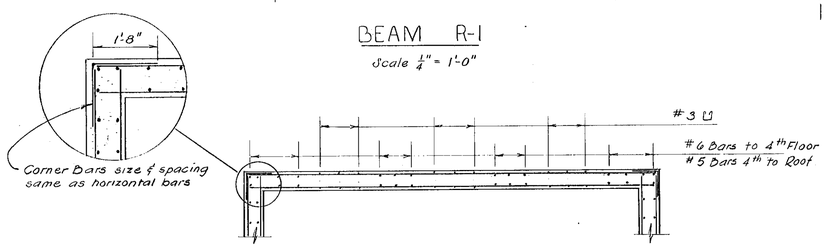

SECTION 1-1

Scale ¼" = 1'-0"

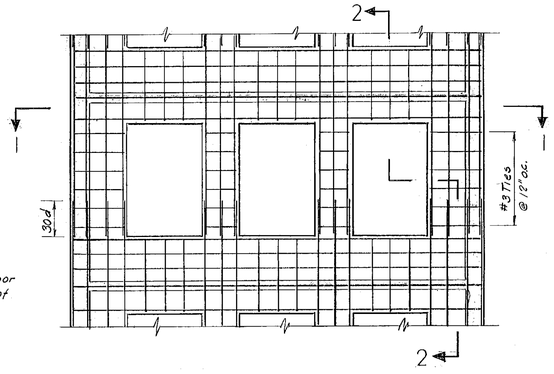

TYPICAL WALL REINFORCEMENT

Scale ¼" = 1'-0"

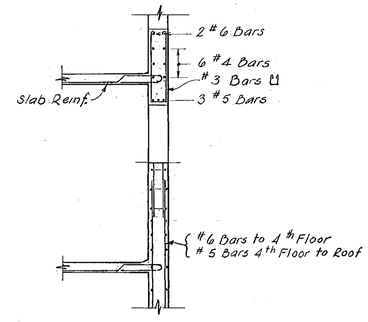

SECTION 2-2

Scale ¼" = 1'-0"

5

CITY OF HARTFORD, CONNECTICUT DEPARTMENT OF ENGINEERING		
TRAINING TOWER FOR THE HARTFORD FIRE DEPARTMENT CITY OF HARTFORD, CONN.		
SUBMITTED Russell E. Dorg	RECOMMENDED Daniel J. Cavallo CITY ARCHITECT	APPROVED Patten H. Barrow CITY ENGINEER
DESIGN RED DRAWN RED TRACED ____ CHECK ____	DAYBOOK NO. 09769 E DATE MAR. 27, 1963	