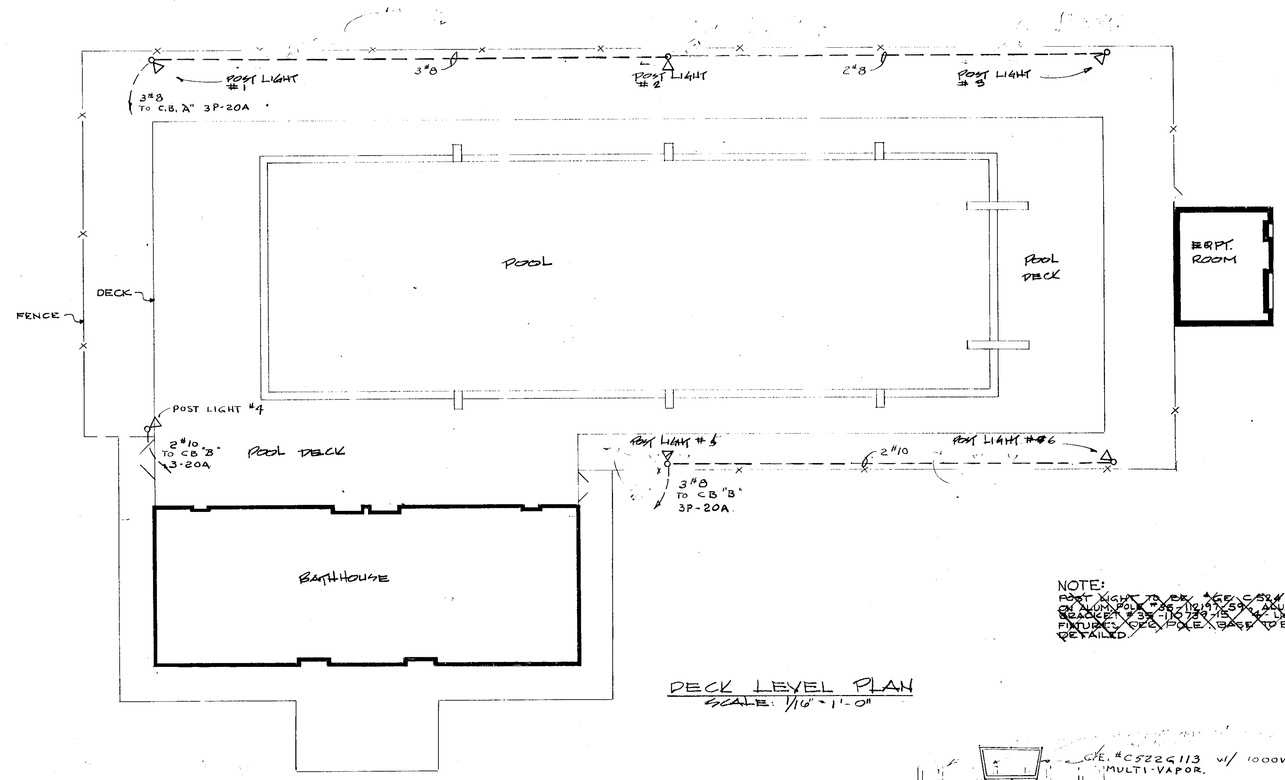

NOTE:
~~POST LIGHT TO BE ALCO CATALOG NO. ON ALUM. POLE #36-110949-59 ALUMINUM GASKET #36-110739-15 & LIGHT FIXTURE. DECORATIVE POLE, GASKET TO BE AS DETAILED.~~

DECK LEVEL PLAN
SCALE: 1/16" = 1'-0"

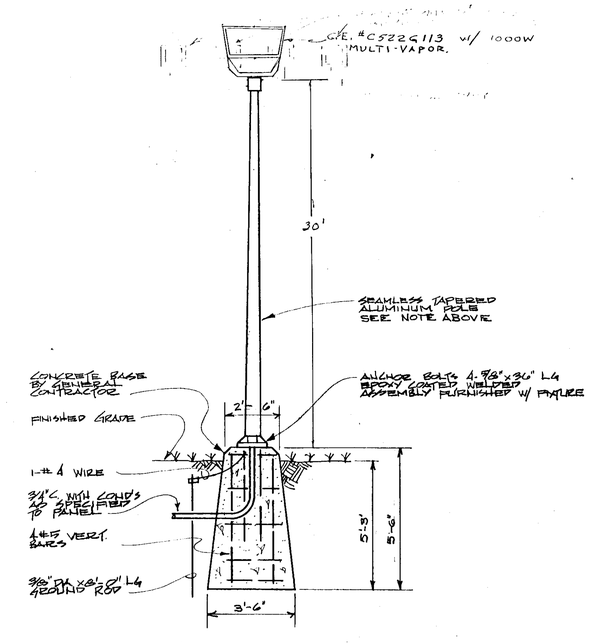

TYPE "P" FLOODLIGHT LUMINAIRE DETAIL (TYP.)
NOT TO SCALE

REVISIONS

NO.	DATE	REMARKS

PROJECT TITLE
POPE PARK POOL & BATHHOUSE

ASSOCIATED ARCHITECTS
FARMINGTON · CONNECTICUT · 06032

STRUCTURAL ENGINEER
BURTON & VAN HOUTEN
WEST HARTFORD CONNECTICUT

MECHANICAL ENGINEER
BURTON & VAN HOUTEN
WEST HARTFORD CONNECTICUT

LAND PLANNER
MAINE & TILLAPAUGH
WEST HARTFORD CONNECTICUT

CORRECT AS BUILT DEC. 20-72

SHEET TITLE
PROPOSED POOL DECK LIGHTING

PROJECT NO. 6047C
DRAWN BY G.J.
CHECKED BY A.Y.
APPROVED BY E.S.C.
DATE 3 JUNE 1971

SHEET NO. R-3
SHEET 1 OF 1

BRUNING 11533