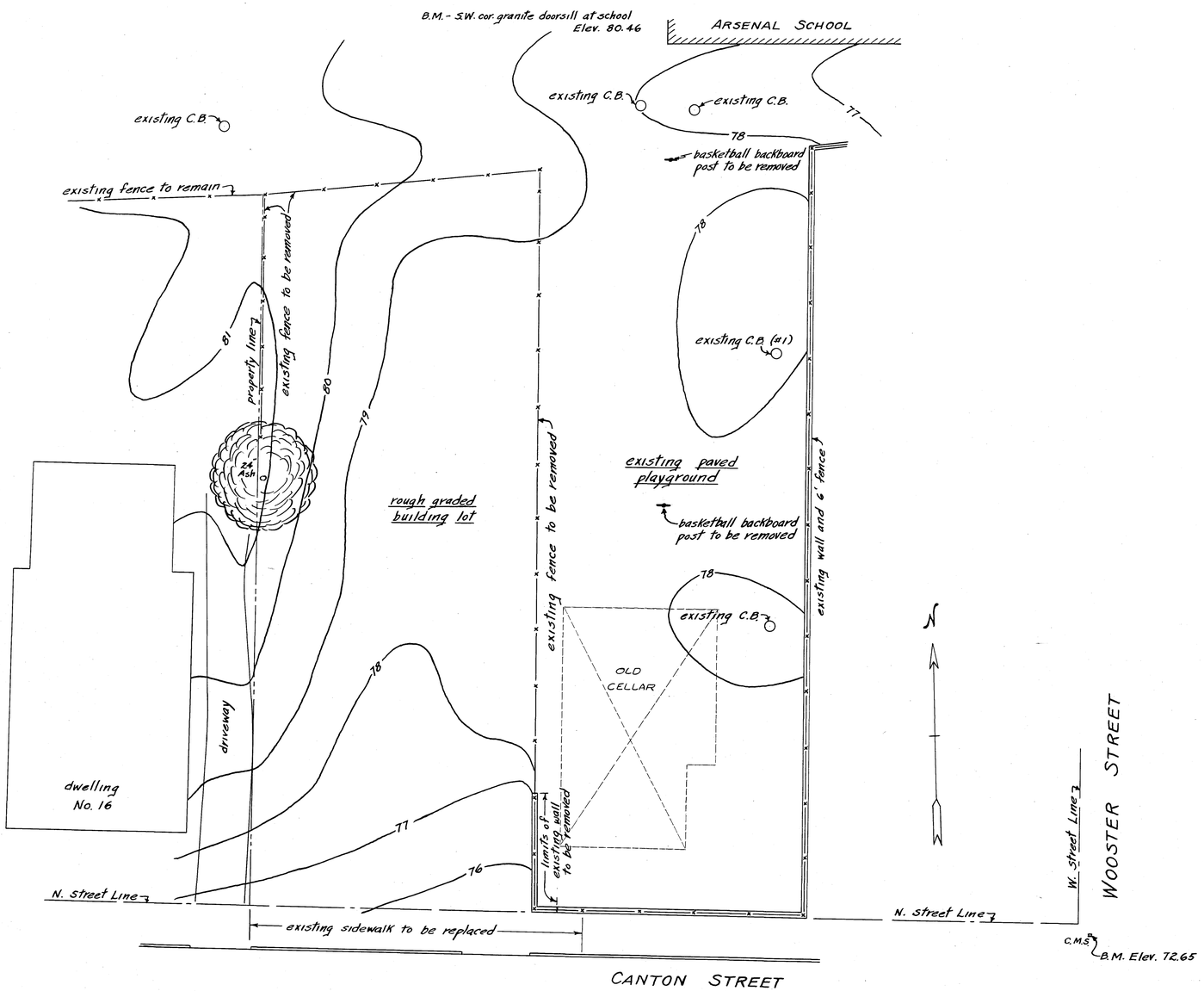

EXISTING TOPOGRAPHY
Scale 1" = 10'-0"

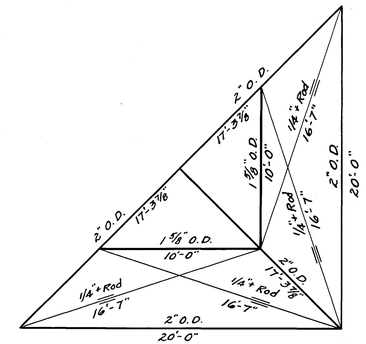

TOP VIEW

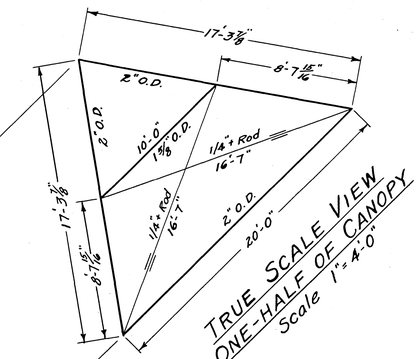

TRUE SCALE VIEW
ONE-HALF OF CANOPY
Scale 1" = 4'-0"

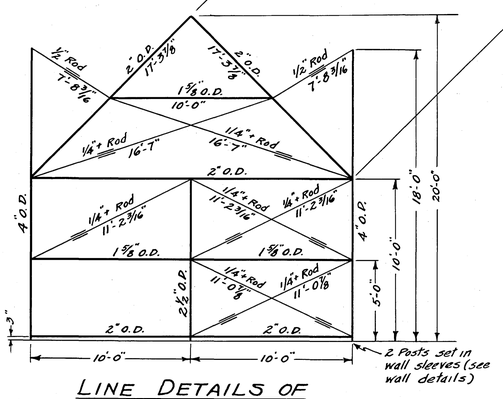

LINE DETAILS OF BACKSTOP ASSEMBLY
WEST ELEVATION

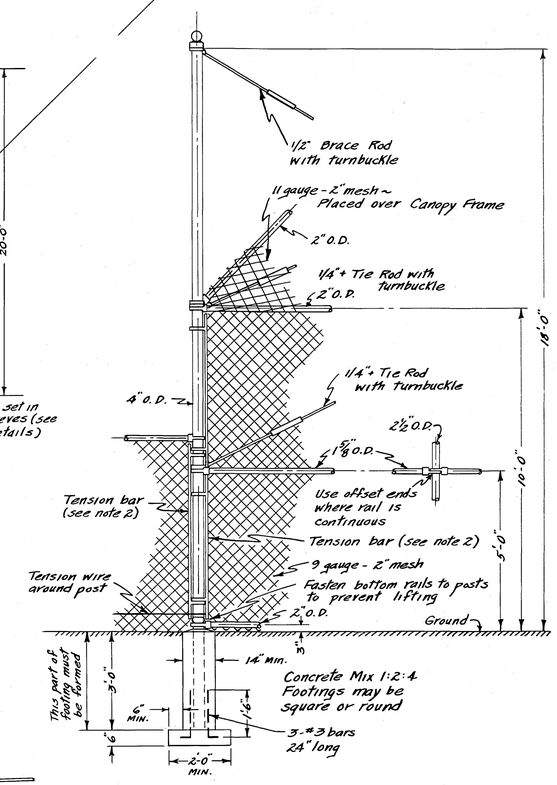

TYPICAL DETAIL OF BACKSTOP (North Corner Shown)
Scale 1" = 2'-0"

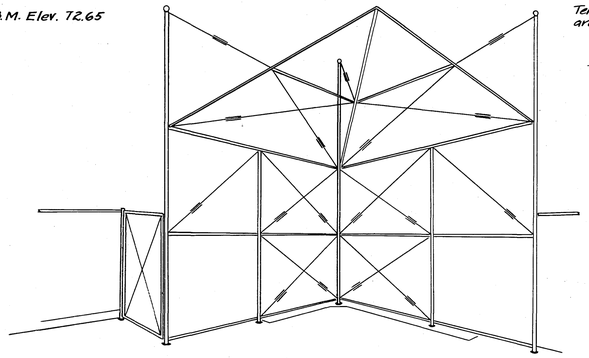

PERSPECTIVE VIEW OF BACKSTOP
No Scale

Notes:

1. Dimensions shown on Line Details of Backstop Assembly are from center of joint to center of joint.
2. Tension Bars shall be fastened to posts at 12" intervals. Where wire fabric abuts 4" posts, tension bars shall be used.
3. Ties - Edges of wire fabric shall be tied to all frame members at intervals not exceeding 6". Where wire fabric requires lapping, the lap shall be 4" and tied at 6" intervals. Where wire fabric crosses a frame member or tie rod, it shall be tied at intervals not exceeding 12".
4. Wire fabric shall be 9 gauge - 2" mesh on the sides of the backstop and 11 gauge - 2" mesh on the canopy.
5. The contractor must verify all dimensions shown on these plans to assure the proper assembly of all components of the backstop.

CITY OF HARTFORD, CONNECTICUT
DEPARTMENT OF ENGINEERING

ARSENAL SCHOOL
EXISTING TOPOGRAPHY AND DETAILS OF NEW BACKSTOP

SUBMITTED	RECOMMENDED	APPROVED
Conrad J. Pickhardt	George E. Heffner	Patrick T. Pascucci
DIVISION ENGINEER	ASST. CITY ENG.	CITY ENGINEER

DESIGN E.J.P. DRAWN R.L.L. TRACED R.L.L. CHECK E.J.P.
DAYBOOK NO. 09734 A
SCALE AS NOTED
DATE OCTOBER 1962