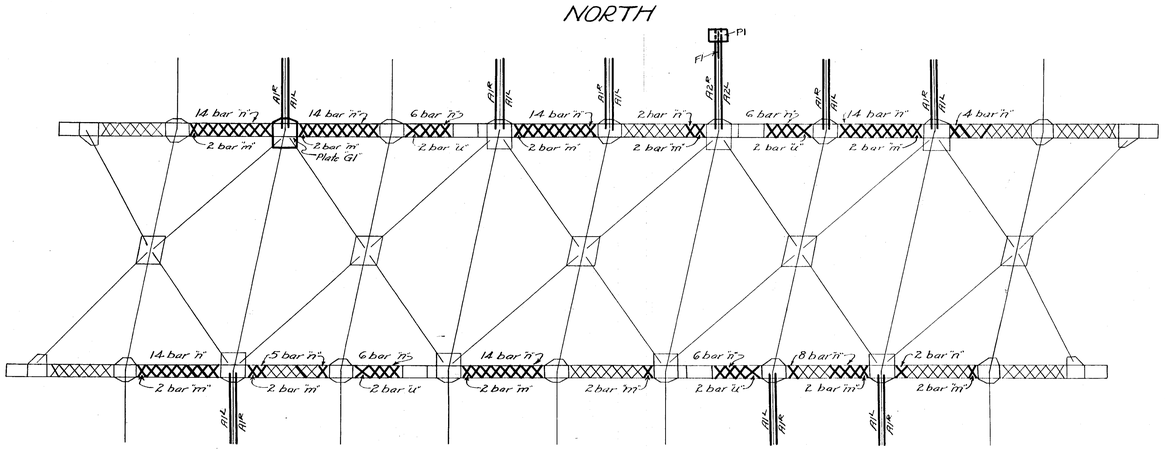

PLAN
Scale-1/8"=1'

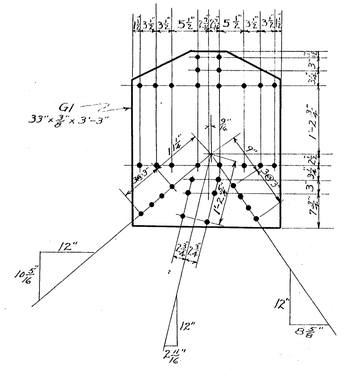

GUSSET PLATE
Scale-3/4"=1'

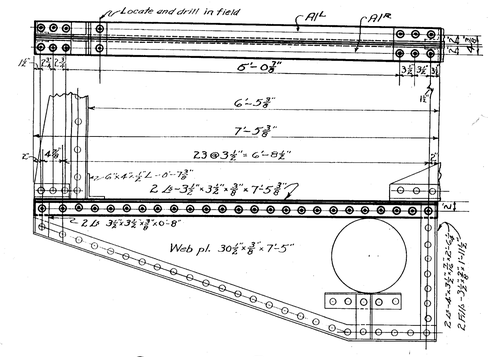

SIDEWALK BRACKET
Scale-3/4"=1'

RIVET LIST				
	NO.	GRIP	LENGTH	NO. TO SHIP
1st Shipment Ordered June 6th	9	1 3/8"	3 3/8"	15
	215	1 3/8"	2 3/8"	260
	6	1 3/8"	2csk.hd	10
	18	7/8"	2 3/8"	30
	108	3/4"	2 1/2"	135
	9	2"	3 3/4"	15
2nd Shipment Ordered June 16	81	3/4"	2 1/4"	100
	69	7/8"	2 3/8"	70
	6	15/16"	2 1/2"	10
	9	1 1/8"	2 5/8"	15
	184	1 1/4"	2 3/4"	220
	108	1 3/8"	2 7/8"	135
	164	1 7/16"	3 1/8"	200
	23	1 3/4"	3 1/2"	35
	6	1 15/16"	3 3/4"	10
	6	2 1/4"	4"	10
	18	3"	4 7/8"	30
	18	3 1/16"	5"	30

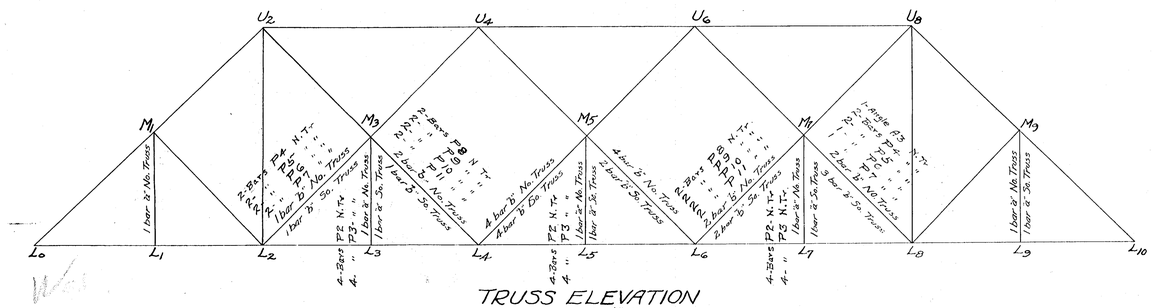

TRUSS ELEVATION
Scale-1/8"=1'

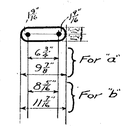

LATTICE BARS FOR TRUSS

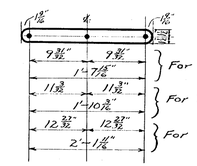

LATTICE BARS FOR BOTTOM CHORD

LIST OF NEW MATERIAL		
NO. PCS.	DESCRIPTION	MARK NO.
8	L-3 1/2"×3 1/2"×3/8"×7'-5 3/8"	A1L
8	L-3 1/2"×3 1/2"×3/8"×7'-5 3/8"	A1R
1	L-6"×3 1/2"×3/8"×10'-2"	A2L
1	L-6"×3 1/2"×3/8"×10'-2"	A2R
1	FILL PL. 3 1/2"×3/8"×2'-8 1/2"	F1
1	PLATE-18"×3/4"×2'-0"	P1
1st Shipment Ordered June 6th		
9 -	Bars 3"×3/8" × 0'-9 7/8"	a
28	" 3"×3/8" × 0'-11 7/16"	b
22	" 3"×3/8" × 1'-11 1/16"	m
159	" 3"×3/8" × 2'-1 15/16"	n
8	" 3"×3/8" × 2'-4 13/16"	u
12	" 3"×1/2" × 2'-6 1/2"	P2
12	" 3"×1/2" × 1'-8 1/2"	P3
4	" 3"×1/2" × 3'-8 3/4"	P4
4	" 3"×1/2" × 3'-0 1/4"	P5
3	" 3"×1/2" × 3'-4"	P6
3	" 3"×1/2" × 4'-1"	P7
4	" 3"×1/2" × 3'-5"	P8
4	" 3"×1/2" × 2'-8 1/2"	P9
4	" 3"×1/2" × 2'-11 1/2"	P10
4	" 3"×1/2" × 3'-9 1/2"	P11
1 - L	3 1/2"×3"×1/2" × 4'-1"	A3
4 -	std Washers	
1	Pl 33"×3/8" × 3'-3"	G1
2nd Shipment Ordered June 14th		

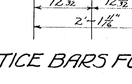

4 - Standard Washer Separators Req'd.

GENERAL NOTES

All rivets 7/8" dia.
All holes 15/16" dia. unless otherwise noted
● Denotes - Old rivets removed and new rivet driven in field through new and old material

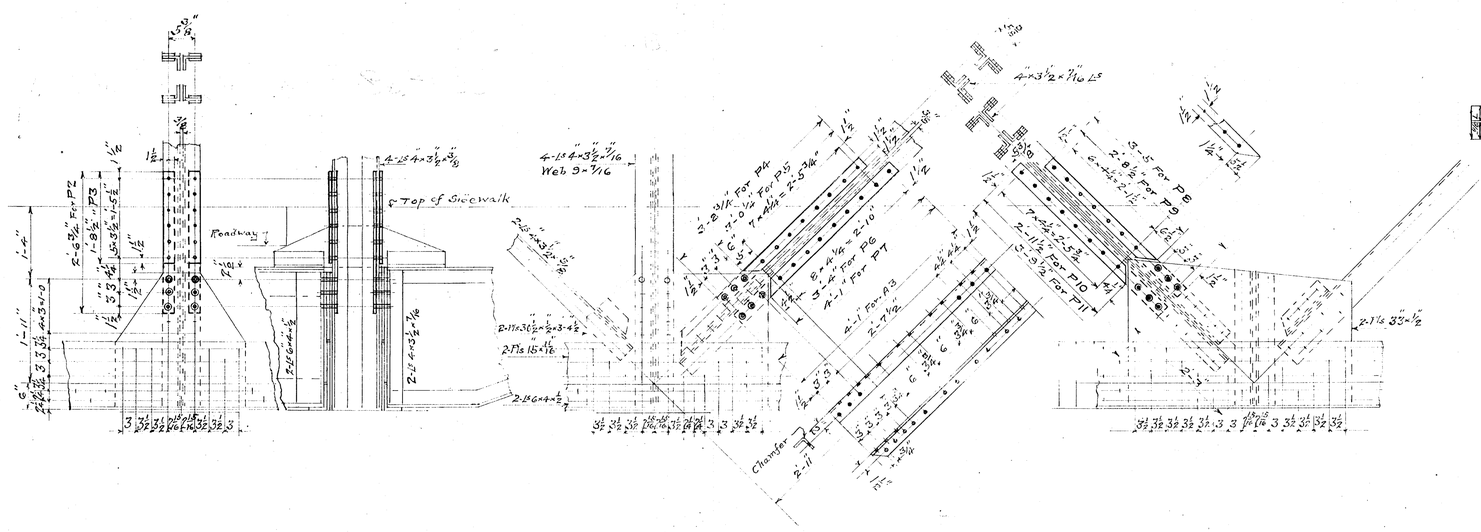

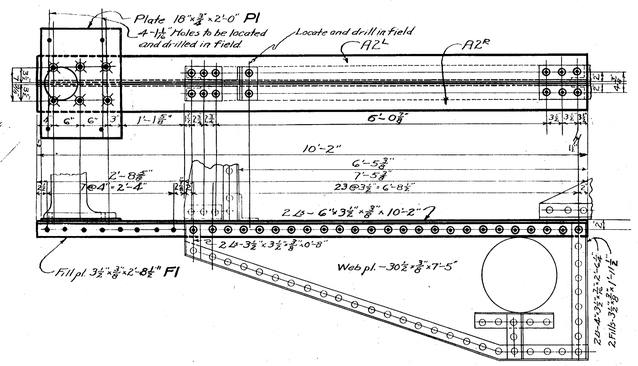

SIDEWALK BRACKET AND SIGNAL SUPPORT
Scale-3/4"=1'

ISSUE	DATE	REMARKS
F		
E		
D		
C		
B		
A		

N.Y.N.H. & H.R.R.
NEW HAVEN - SPRINGFIELD
BRIDGE No 36.83
WALNUT STREET
0.28 MILES NORTH OF
HARTFORD STATION, CONN.

SCALES AS NOTED. JUNE 4, 1930.
APPROVED:

ENGINEER OF STRUCTURES. CHIEF ENGINEER.

OPERATING DIV.- HARTFORD.