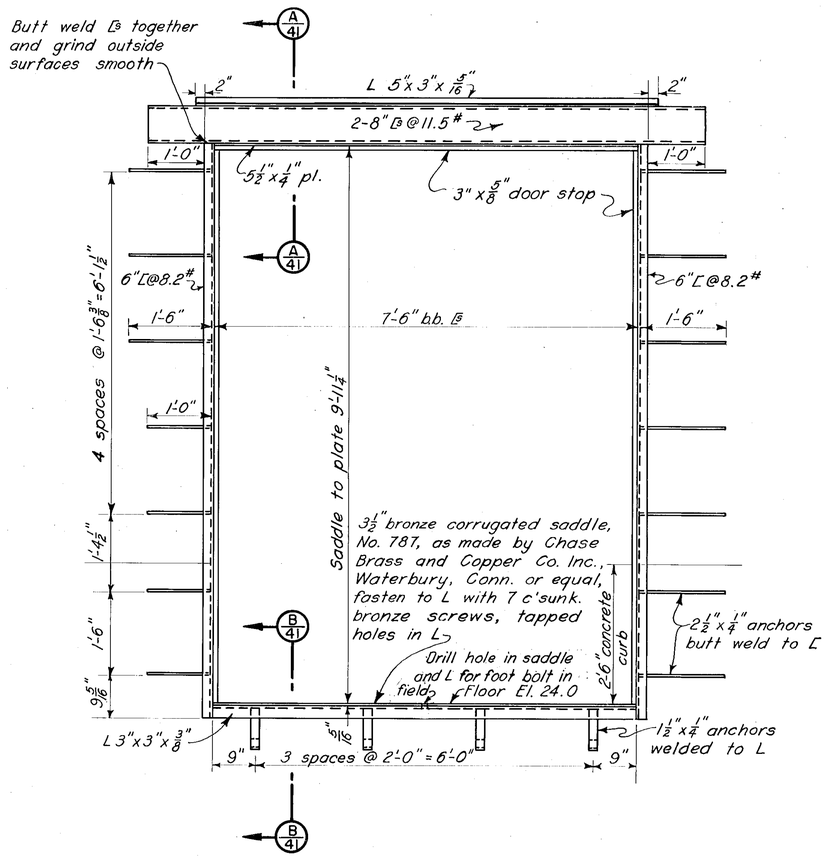

ENTRANCE DOOR FRAME

1 REQUIRED ST. WT. 662 LBS.

SCALE 3/4" = 1'-0"

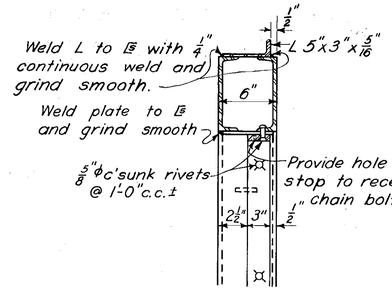

SECTION A/41

SCALE 1½" = 1'-0"

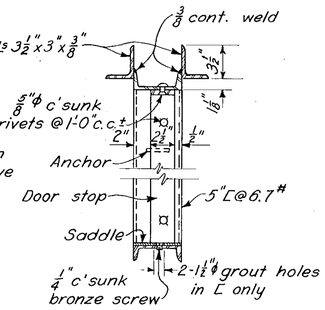

SECTION C/41

SCALE 1½" = 1'-0"

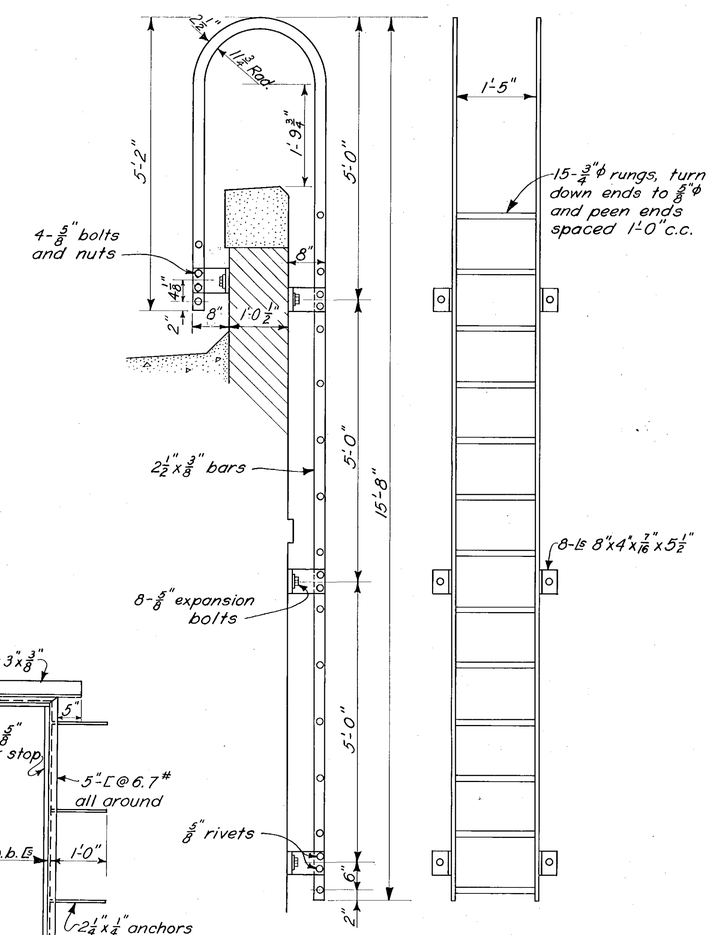

ROOF LADDER

1 REQUIRED TOTAL WT. 245 LBS.

SCALE 3/4" = 1'-0"

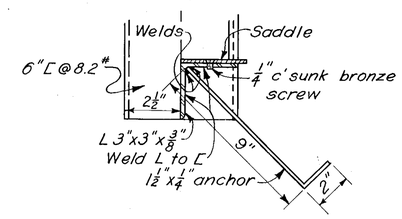

SECTION B/41

SCALE 3" = 1'-0"

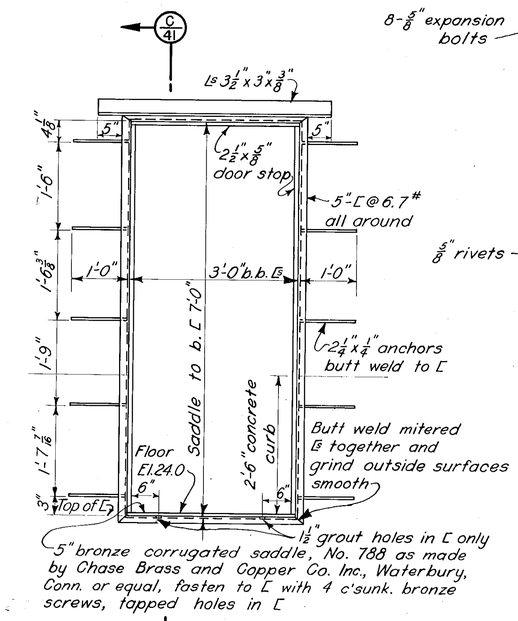

SERVICE DOOR FRAME

1 REQUIRED ST. WT. 314 LBS.

SCALE 3/4" = 1'-0"

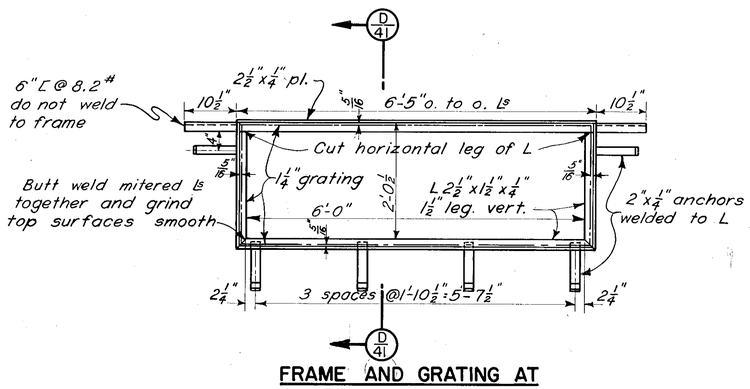

FRAME AND GRATING AT MECHANICALLY CLEANED BAR SCREENS-F8

2 REQUIRED TOTAL WT. 283 LBS.

SCALE 3/4" = 1'-0"

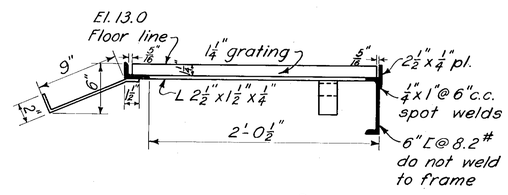

SECTION D/41

SCALE 1½" = 1'-0"

NOTES

⅝"φ rivets, 11/16" holes

For location of mechanically cleaned bar screen frame and grating, see Sheet No. 25.

Mechanically cleaned bar screen frame and grating were paid for under Item No. 12.

All other material on this sheet was paid for under Item No. 11.

RECORD DRAWINGS

KEY	DATE	REVISION (Indicated by Δ)	REV. BY	CK. BY	AP. BY

CONNECTICUT RIVER FLOOD CONTROL

KEENEY LANE PUMPING STATION

HARTFORD, CONN.

MISCELLANEOUS STEEL

DETAILS NO. 4

CONNECTICUT RIVER — CONNECTICUT

IN 60 SHEETS — SCALE 3/4 IN. = 1 FT. — SHEET NO. 41

U.S. ENGINEER OFFICE, PROVIDENCE, R.I., JUNE 1944

SUBMITTED: E. M. Viren, SENIOR ENGINEER, HEAD, STRUCTURAL SECTION

APPROVAL RECOMMENDED: R. B. Brown, HEAD ENGINEER, CHIEF, ENGINEERING DIV.

APPROVED: H. C. Fuss, COL. CORPS OF ENGINEERS, DISTRICT ENGINEER

PREPARED: C. J. Hayes, STRUCTURAL SUBSECTION

DRAWN: A. S. TRACED: R. J. G. CHECKED: C. J. H.

FILE NO. CT-4-3255

Ht. 11

PRINTED ON "HARVARD CITY" TRACING CLOTH A. & E. CO., N.Y.