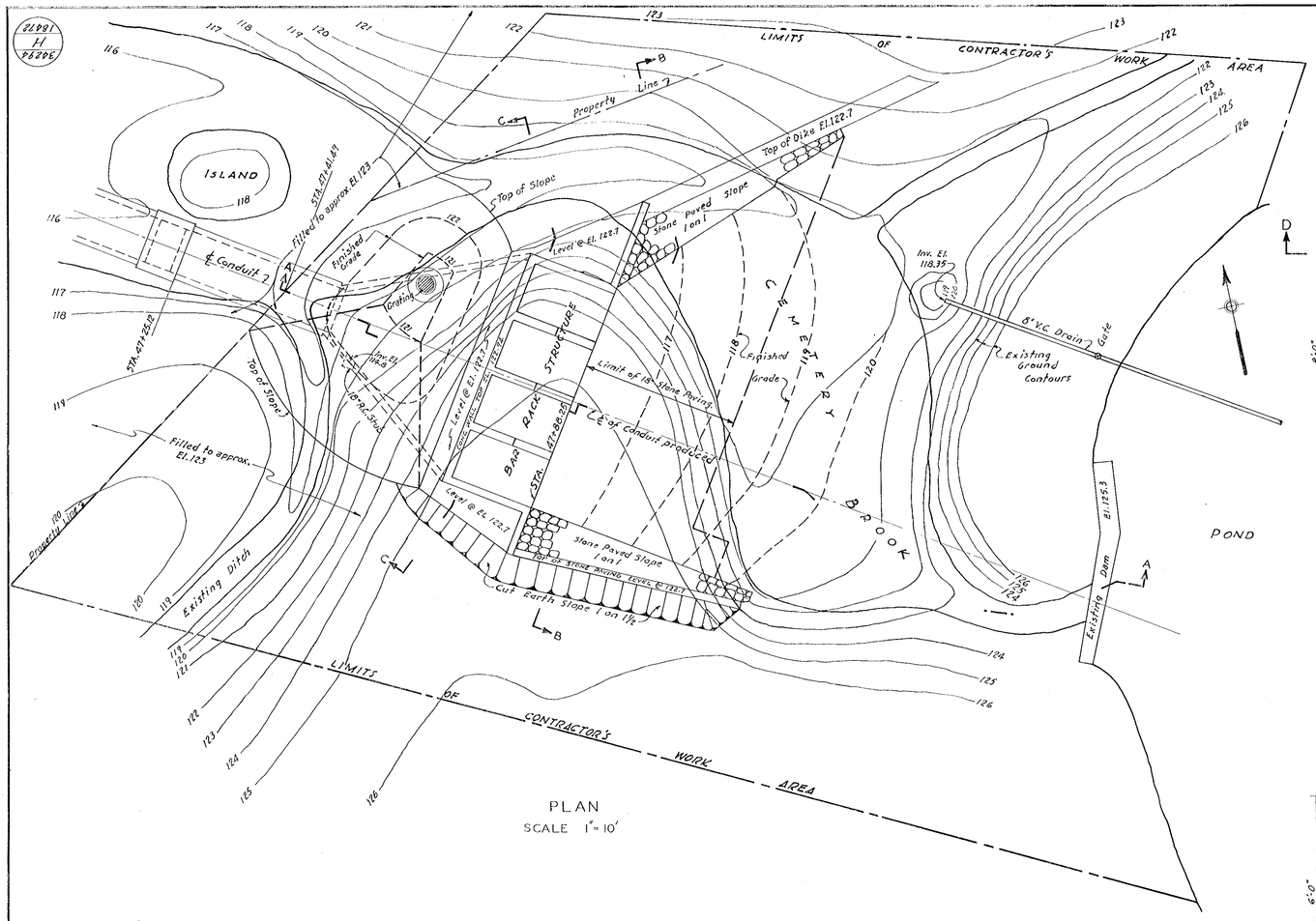

PLAN
SCALE 1" = 10'

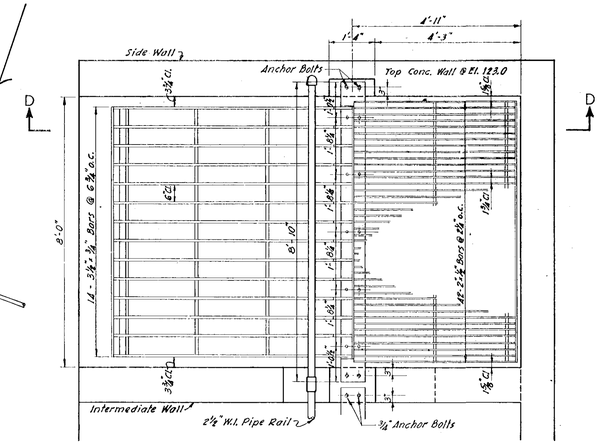

PLAN OF BAR RACK IN PLACE
(4 REQUIRED)
SCALE ½" = 1'-0"

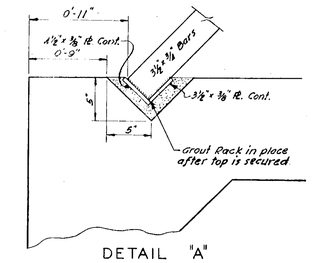

DETAIL "A"
SCALE 1½" = 1'-0"

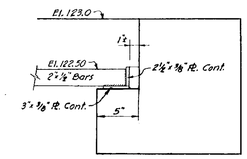

DETAIL "B"
SCALE 1½" = 1'-0"

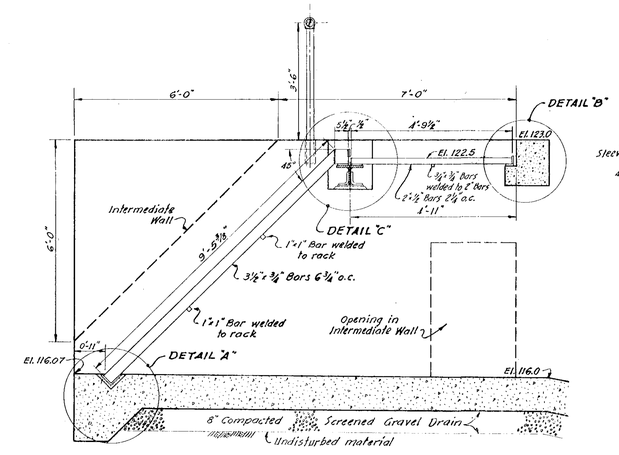

SECTION D - D
SCALE ½" = 1'-0"

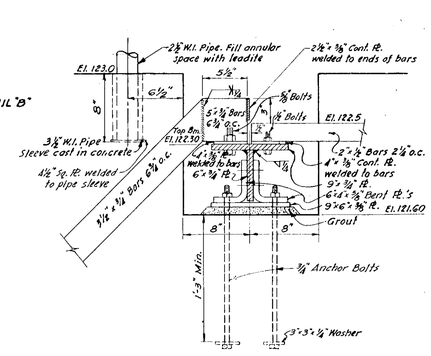

DETAIL "C"
SCALE 1½" = 1'-0"

Note:
All bars and plates shall be genuine wrought iron.

Bolts shall be of wrought iron.

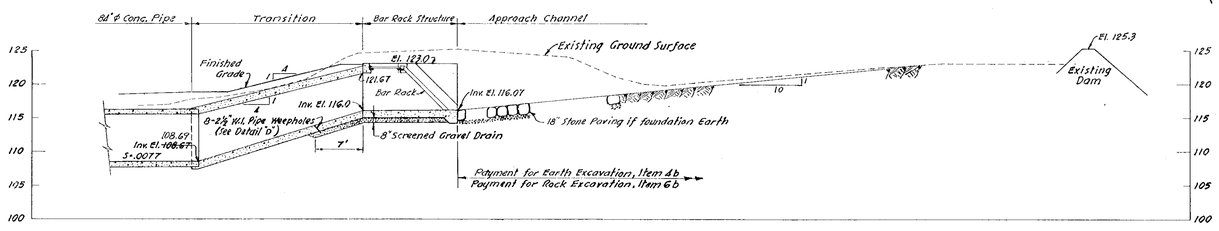

SECTION A - A
SCALE 1" = 10'

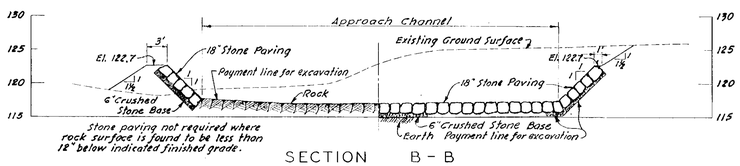

SECTION B - B
SCALE 1" = 10'

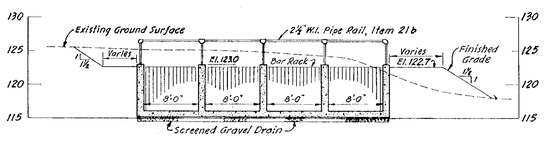

SECTION C - C
SCALE 1" = 10'

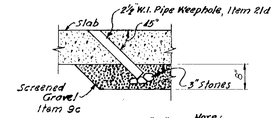

DETAIL "D"

Note:
Screened gravel drains and weepholes are required only when base slab on earth.

REVISION	MADE BY	CHECKED BY	DESCRIPTION
1 Jan 1960	W.H.G.	S.A.H.	Record Revisions

APPROVED
FOR PARK RIVER FLOOD CONTROL COMMISSION
Chas. W. Cole Director 5/7/57
REG. PROF. ENGR. CT. NO. 290 DATE
FOR METCALF & EDDY, ENGINEERS
John W. Raymond Jr. 5/10/57
REG. PROF. ENGR. CT. NO. 3422 DATE

RECORD DRAWING

PARK RIVER FLOOD CONTROL COMMISSION
HARTFORD, CONNECTICUT

CEMETERY BROOK CONDUIT

INTAKE STRUCTURE
BAR RACK DETAILS

SCALE, AS SHOWN — MAY, 1957

METCALF & EDDY
ENGINEERS
BOSTON, MASS.

34294 H 18478

DRAWN BY G.B.H.
TRACED BY A.J.P.
CHECKED BY G.B.H.-R.H.L.