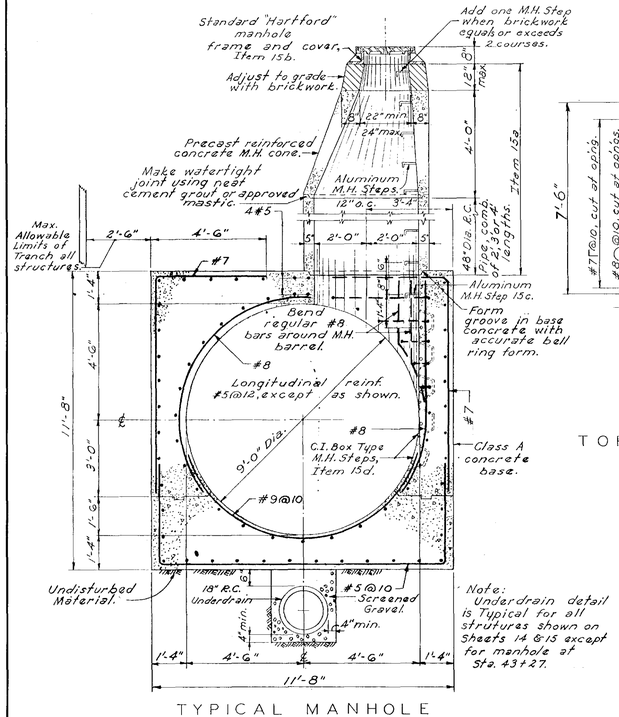

TYPICAL MANHOLE SECTION

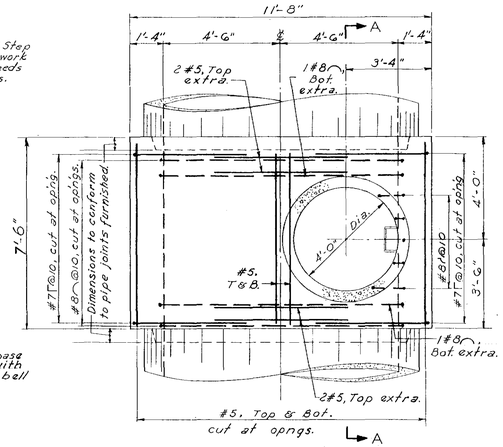

TOP PLAN TYPICAL MANHOLE

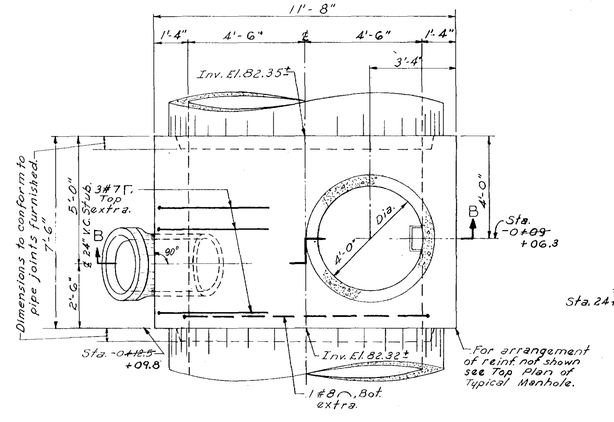

TOP PLAN OF MANHOLE AT NEW BRITAIN AVE.

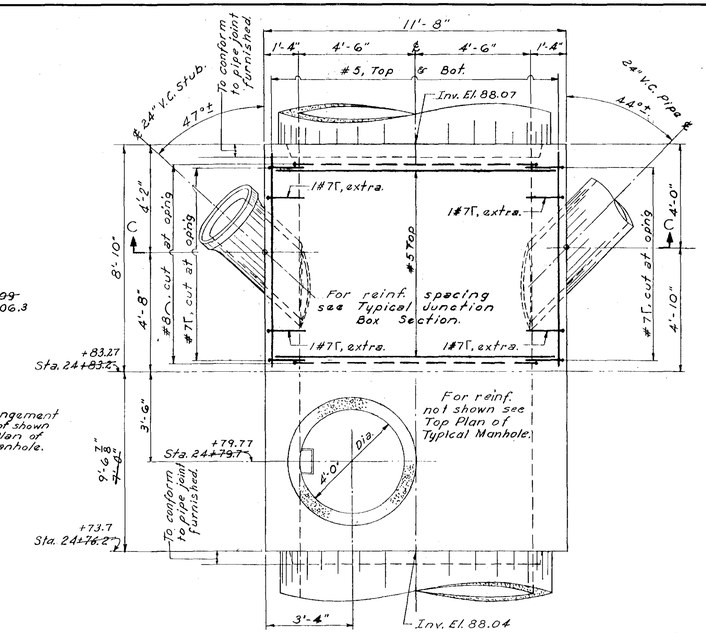

TOP PLAN OF MANHOLE & JUNCTION BOX AT LINNMOORE ST.

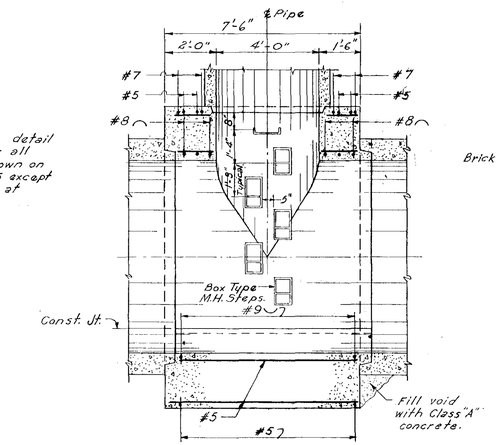

SECTION A - A

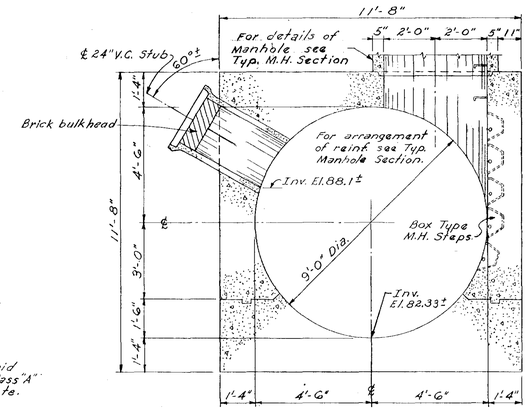

B - B

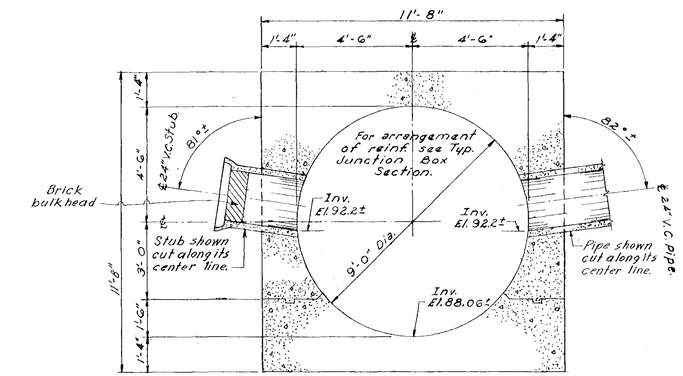

C - C

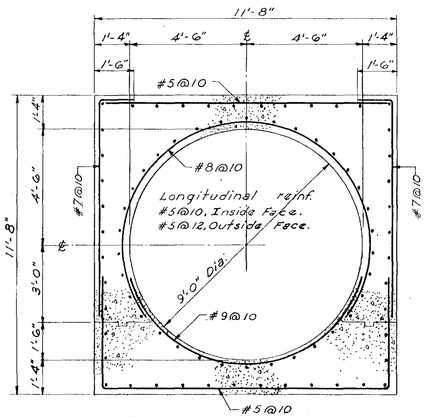

TYPICAL JUNCTION BOX SECTION

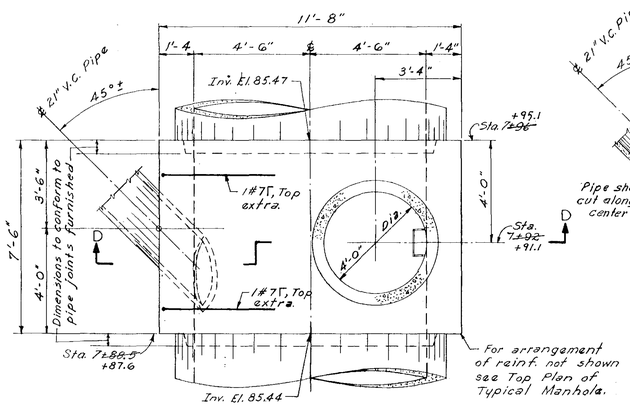

TOP PLAN OF MANHOLE & JUNCTION BOX AT ANSONIA ST.

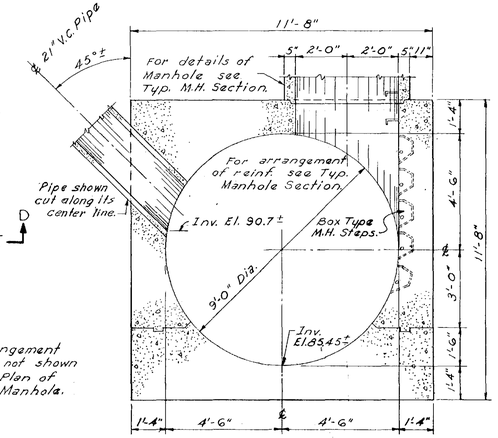

D - D

Notes:

1. Stubs in monolithic concrete structures shall project at least 6" from the face of the concrete to the outside of the bell at its nearest point.
2. For General Plan at New Britain Ave. and Ansonia St., see Sheet 19.
3. For General Plan at Linnmoore St., see Sheet 21.
4. Connecting pipes to be cut off flush with inside wall of structure.

RECORD DRAWING

APPROVED

FOR PARK RIVER FLOOD CONTROL COMMISSION

Chas. M. Cox Jr. Director — 5/7/57
REG. PROF. ENGR. CT. NO. 290 — DATE

FOR METCALF & EDDY, ENGINEERS

John W. Raymond Jr. — 5/10/57
REG. PROF. ENGR. CT. NO. 3422 — DATE

PARK RIVER FLOOD CONTROL COMMISSION
HARTFORD, CONNECTICUT

CEMETERY BROOK CONDUIT

MANHOLES AND JUNCTION BOXES

PLANS AND SECTIONS I

SCALE, 3/8" = 1'-0" — MAY, 1957

METCALF & EDDY
ENGINEERS
BOSTON, MASS.

34278 H 18456

DRAWN BY J.F.G. R.H.L.
TRACED BY J.F.G.
CHECKED BY S.W.D. R.H.L.

REVISION	MADE BY	CHECKED BY	DESCRIPTION
4. Jan. 1960	J.F.G.	S.A.H.	Record Revisions.
3. JUNE 13, 1957	L.S.B.	S.A.H.	STUBS REVISED
2. JUNE 13, 1957	L.S.B.	S.A.H.	DIMENSIONS AND STATIONS CHANGED BY ORDS OF STAKE.
1. JUNE 14, 1957	L.S.B.	S.A.H.	NOTES ADDED

CONTRACT 1957 3 — SHEET 14 OF 31

G.H.R.C. Serial No. 000880.