65-1

RECEIVED BY
SEP 11 4 07 PM '81
TOWN & CITY CLK.
HARTFORD
VOL ____ PAGE ____

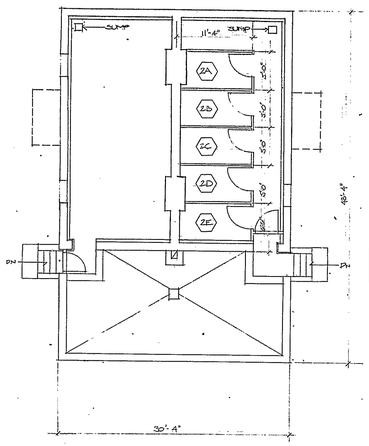

1 / C2 BASEMENT BLDG 2
1/8" = 1'-0"

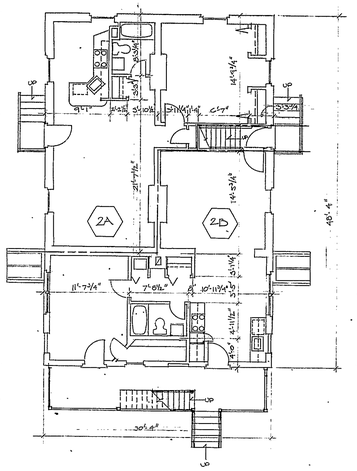

2 / C2 FIRST FLOOR BLDG 2
1/8" = 1'-0"

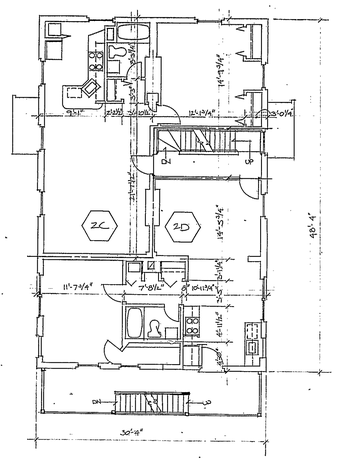

3 / C2 SECOND FLOOR BLDG 2
1/8" = 1'-0"

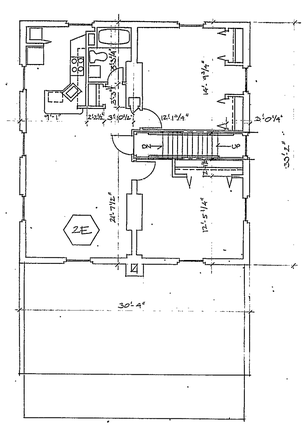

4 / C2 THIRD FLOOR BLDG 2
1/8" = 1'-0"

NOTE

DIMENSIONAL TOLERANCES

PLANS SHOW RENOVATED BUILDINGS APPROX. 100 YEARS OLD. ONLY EXTERIOR OVERALL DIMENSIONS SHOWN AS ACTUAL ARE EXACT. ALL INTERIOR DIMENSIONS AND NOMINAL EXTERIOR OVERALL DIMENSIONS ARE BASED ON OBSERVATION AND MEASUREMENTS OF TYPICAL BUILDINGS, CHIEFLY BUILDINGS NO 5 AND NO. 10.

SOME VARIATIONS IN WINDOW LOCATIONS OCCUR.

ACTUAL EXTERIOR OVERALL DIMENSIONS ARE FROM THE SURVEY OF COLT ESTATES, PROPERTY OF SZENTKUTI ASSOCIATES, PREPARED BY JAMES J. LOZZI, RE. AND L.S. CONN. REG. NO. 9915 DATED SEPT. 10, 1980

THE LOCATION AND AMMOUNT OF VARIATION BETWEEN THE TYPICAL INTERIOR DIMENSIONS SHOWN AND ACTUAL INTERIOR DIMENSIONS ARE NOT SHOWN IN THESE PLANS

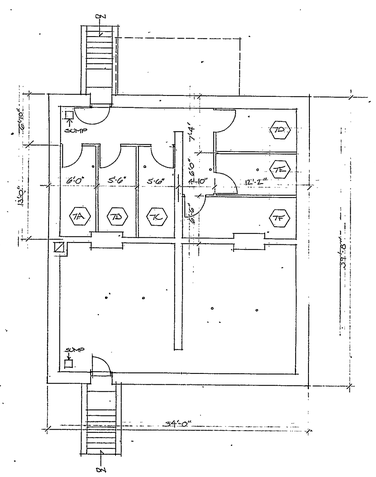

5 / C2 BASEMENT BLDG 7
1/8" = 1'-0"

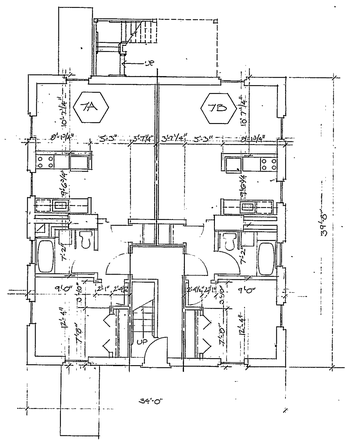

6 / C2 FIRST FLOOR BLDG 7
1/8" = 1'-0"

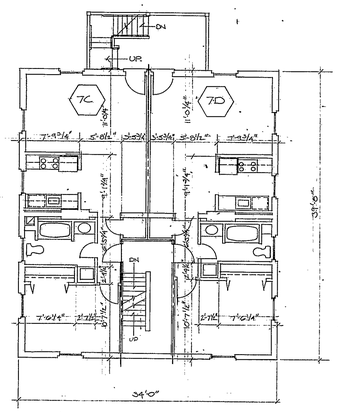

7 / C2 SECOND FLOOR BLDG 7
1/8" = 1'-0"

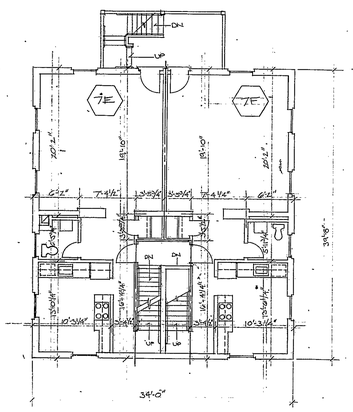

8 / C2 THIRD FLOOR BLDG 7
1/8" = 1'-0"

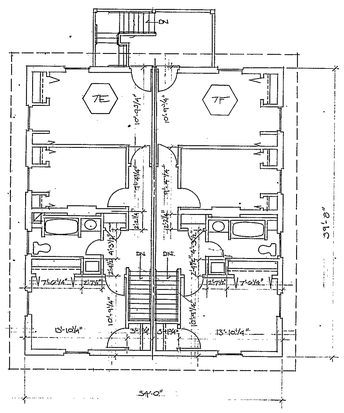

9 / C2 FOURTH FLOOR BLDG 7
1/8" = 1'-0"

HUD SUBMISSION, NOT FOR LEGAL USE — NOV 12, 1980

REVISIONS

WILLIAM PETCHILER ARCHITECT
85 WILLOW STREET NEW HAVEN, CONNECTICUT 06511 TEL. 203-787-6867

CONDOMINIUM PLANS BLDGS 2 AND 7

COLT ESTATES II
HARTFORD HUD LT-017-84035
SZENTKUTI ASSOCIATES
REAL ESTATE DEVELOPMENT

DATE:
CHECKED:
DRAWN:
JOB:
SHEET: C2

DATAPRINT N42228

EBA Fig. Corp. Hartford Ct.
65
EBA N.